User Manual

Hybrid Solar Inverter

6KW

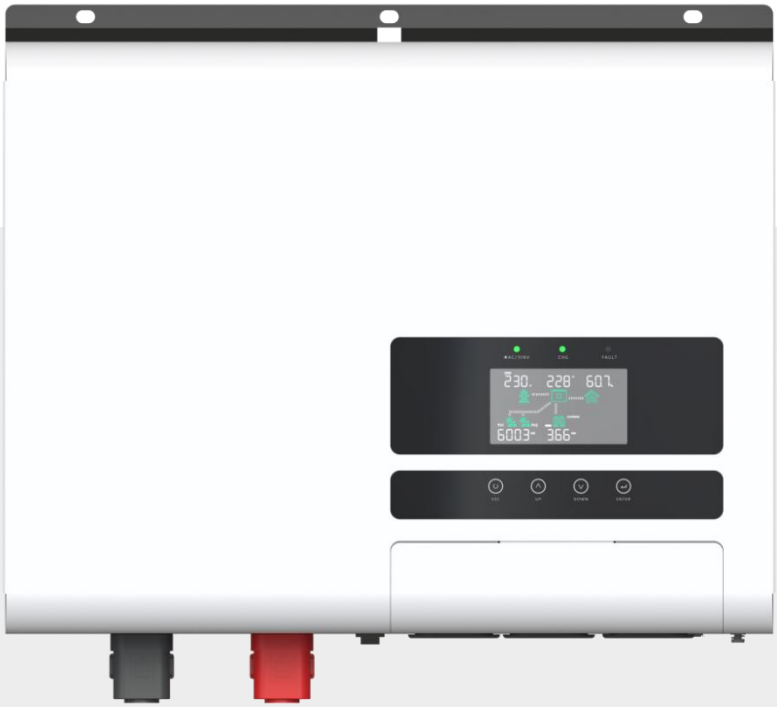

Version: 1.2

330-00002-020

Table Of Contents

1. About This Manual 1
   1.1 Validity 1
   1.2 Scope 1
   1.3 Target Group 1
   1.4 Safety Instructions 1
2. Introduction 3
   2.1 Basic System Architecture 3
   2.2 Features 3
   2.3 Product Overview 4
3. Installation 5
   3.1 Unpacking And Inspection 5
   3.2 Mounting The Unit 5
   3.3 Battery Connection 6
   3.4 AC Input/Output Connection 9
   3.5 PV Connection 11
   3.6 Dry Contact Signal 12
   3.7 CT Connection 13
4. Operation 15
   4.1 Power ON/OFF 15
   4.2 Operation And Display Panel 15
   4.3 LCD Display Icons 16
   4.4 Display Information 18
   4.5 Operating Mode Description 20
   4.6 LCD Basic Setting 22
   4.7 LCD Advance Setting 33
5. Battery Equalization 39
6. Warning Indicator 41
7. Fault Reference Code 42
8. Parallel Installation Guide 43
   8.1 Introduction 43
   8.2 Package Contents 43
   8.3 Mounting The Unit 43
   8.4 Wiring Connection 43
   8.5 Parallel Operation In Single Phase 44
   8.6 Parallel Operation In Three Phase 46
   8.7 PV Connection 48
   8.8 LCD Setting And Display 49
9. Regular Maintenance 51
10. Specifications 52
11. Trouble Shooting 57

1. About This Manual

1.1 Validity

This manual is valid for the 6kW hybrid solar inverter

1.2 Scope

This manual describes the assembly, installation, operation and troubleshooting of this unit. Please read this manual carefully before installations and operations. **Contents may be periodically updated or revised due to product development. The information in this manual is subject to change without notice.**

1.3 Target Group

This document is intended for qualified persons and end users. Qualified persons must have the following skills:

1. Knowledge of how an inverter works and is operated
2. Training in how to deal with the dangers and risks associated with installing and using electrical devices and installations
3. Training in the installation and commissioning of electrical devices and installations
4. Knowledge of the applicable standards and directives
5. Knowledge of and compliance with this document and all safety information
6. Knowledge of the applicable local standards and directives

1.4 Safety Instructions

1.41 Labels Description

Label	Description
	The DC input terminals of the inverter must not be grounded.
	Surface high temperature, Please do not touch the inverter case.
	Caution, risk of electric shock symbol indicates important safety instructions, which if not correctly followed, could result in electric shock.
	Please read the instructions carefully before use.
	This product shall not be disposed of with household waste. They should be segregated and brought to an appropriate collection point to enable recycling and avoid potential impacts on the environment and human health.
	CE mark of conformity
	The AC and DC circuits must be disconnected separately, and the maintenance personnel must wait for 5 minutes before they are completely powered off before they can start working.
	Rohs mark of conformity

1.42 Notice For Use

WARNING: This chapter contains important safety and operating instructions. Read and keep this manual for future reference.

1. All operations and connections need to be carried out by qualified persons.
2. Before using the unit, read all instructions and cautionary marking on the unit, the batteries and all appropriate sections of this manual. The company has the right not to quality assurance, if not according to the instructions of this manual for installation and cause equipment damage.
3. All the electrical installation must comply with the local electrical safety standards.
4. When install PV modules in the daytime, installer should cover the PV modules by opaque materials, otherwise it will be dangerous as high terminal voltage of modules in the sunshine.
5. **CAUTION-**To reduce risk of injury, charge only deep-cycle lead-acid type rechargeable batteries and lithium batteries. Other types of batteries may burst, causing personal injury and damage.
6. Be very cautious when working with metal tools on or around batteries. A potential risk exists to drop a tool to spark or short circuit batteries or other electrical parts and could cause an explosion.
7. **NEVER** charge a frozen battery.
8. Do not disassemble the unit. Take it to a qualified service center when service or repair is required. Incorrect re-assembly may result in a risk of electric shock or fire.
9. To reduce risk of electric shock, disconnect all wirings before attempting any maintenance or cleaning. Turning off the unit will not reduce this risk.
10. For optimum operation of this inverter, please follow required spec to select appropriate cable size. It′s very important to correctly operate this inverter.
11. Please strictly follow installation procedure when you want to disconnect AC or DC terminals. Please refer to INSTALLATION section of this manual for the details.
12. GROUNDING INSTRUCTIONS -This inverter should be connected to a permanent grounded wiring system. Be sure to comply with local requirements and regulation to install this inverter.
13. **NEVER** cause AC output and DC input short circuited. Do NOT connect to the mains when DC input short circuits.
14. Make sure the inverter is completely assembled, before the operation.
15. **WARNING:** Because this inverter is non-isolated, only three types of PV modules are acceptable: single crystalline, poly crystalline with class A-rated and CIGS modules. To avoid any malfunction, do not connect any PV modules with possible current leakage to the inverter. For example, grounded PV modules will cause current leakage to the inverter. When using CIGS modules, please be sure NO grounding.
16. **CAUTION:** It's required to use PV junction box with surge protection. Otherwise, it will cause damage on inverter when lightning occurs on PV modules.

2. Introduction

2.1 Basic System Architecture

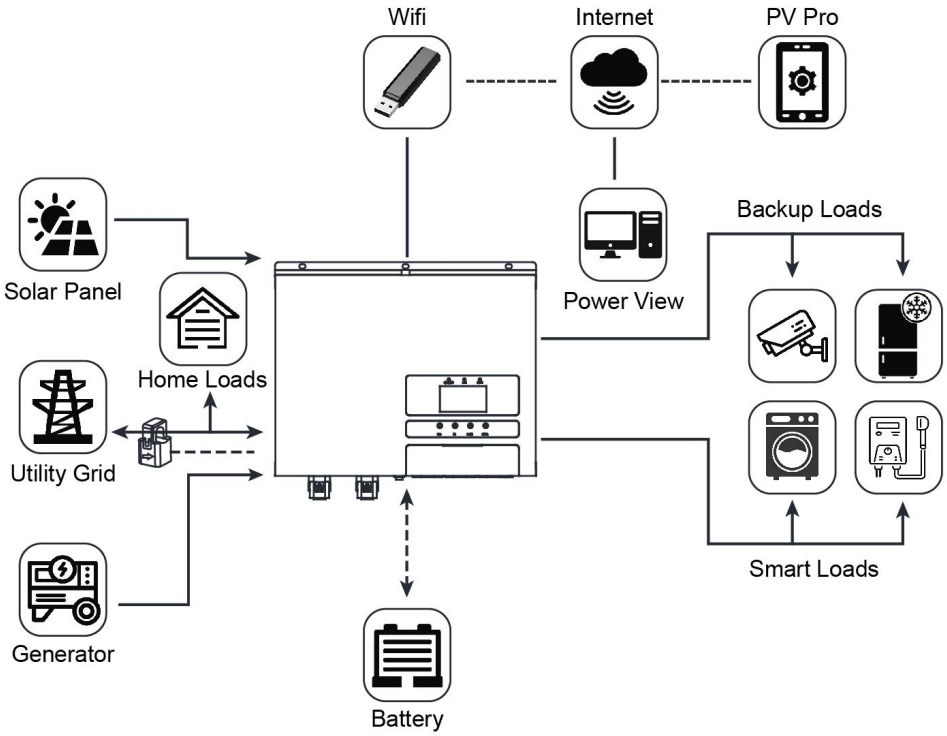

Hybrid Power System

This is a multifunctional PV Hybrid inverter, integrated with a MPPT solar charge controller, a high frequency pure sine wave inverter and a UPS function module in one machine, which is perfect for off grid backup power, self-consumption applications and on grid application. This inverter can work with or without battery.

The whole system also need other devices to achieve complete running such as PV modules, generator, or utility grid. Please consult with your system integrator for other possible system architectures depending on your requirements. The WiFi module is a plug-and-play monitoring device to be installed on the inverter. With this device, users can monitor the status of the PV system from the mobile phone or from the website anytime anywhere.

2.2 Features

1. Rated power 6KW, power factor 1
2. Integrated with 2 MPPT solar charge controllers, MPPT range 65Vdc~450Vdc
3. Built-in anti-dusk kit
4. Compatible to utility mains or generator power
5. With separated smartload output interface, configurable output usage timer and prioritization
6. With external CT for zero exporting into grid
7. With CAN/RS485 for BMS communication
8. With the ability to work without battery
9. Parallel operation up to 9 unit (only with battery connected)
10. WiFi remote monitoring (optional)

2.3 Product Overview

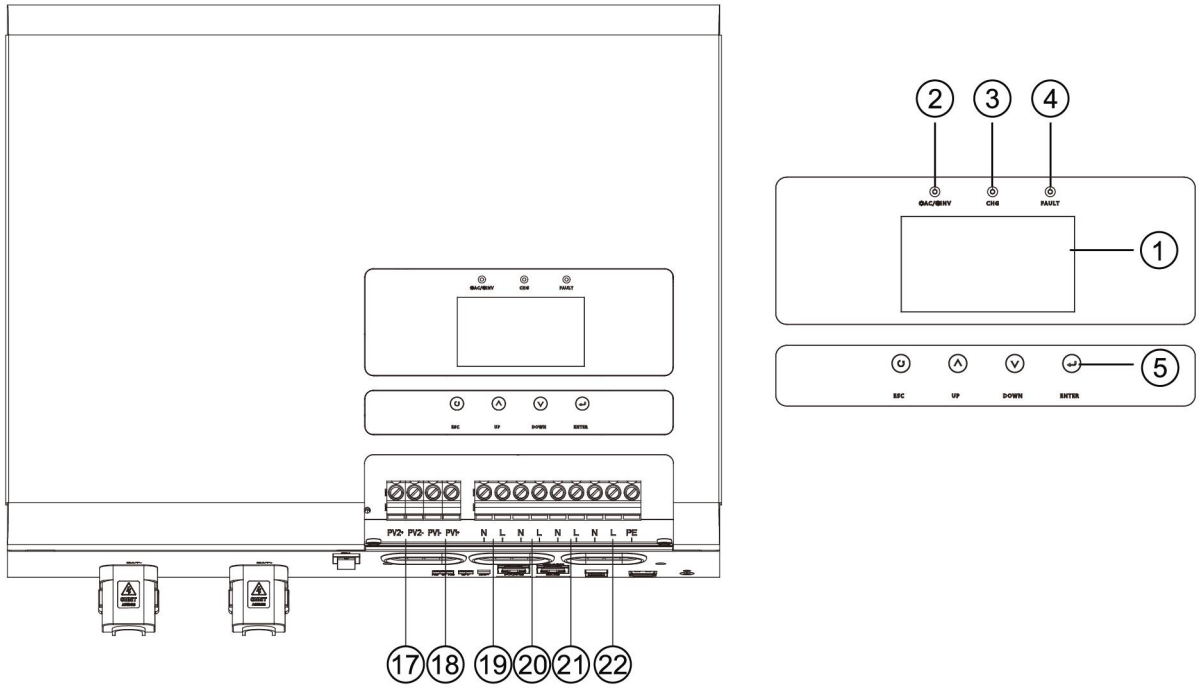

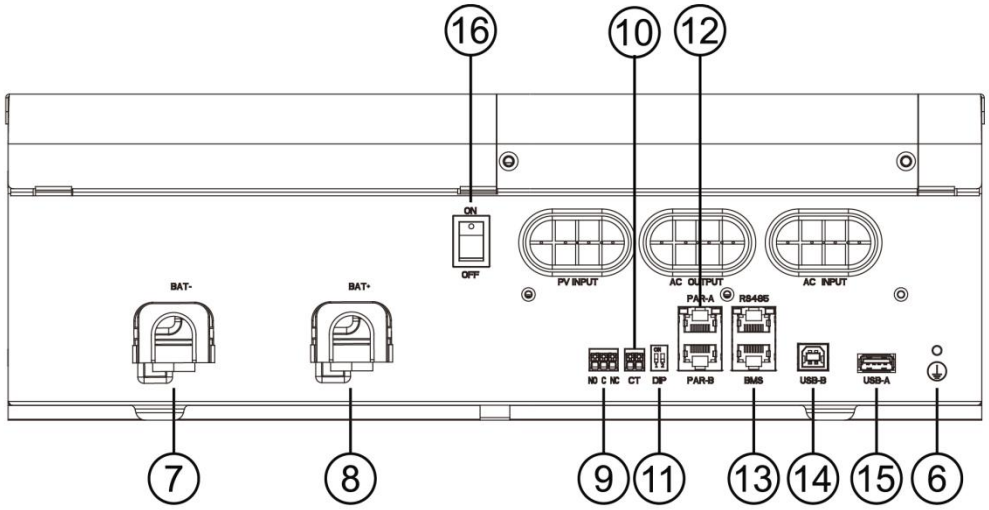

1. LCD display	2. Status indicator
3. Charging indicator	4. Fault indicator
5. Function buttons	6. GND
7. Battery input -	8. Battery input +
9. Dry contact	10. External CT
11. DIP	12. Parallel communication ports
13. RS485 communication port (for expansion) BMS communication port(support CAN/RS485 protocol)	14. USB-B communication port
15. USB-A communication port（WiFi）	16. Power on/off switch
17. PV2 input	18. PV1 input
19. Load	20. Smart Load
21. Generator input	22. Grid input

3. Installation

3.1 Unpacking And Inspection

Before installation, please inspect the unit. Be sure that nothing inside the package is damaged. You should have received the following items in the package:

Part List		
Item	Item Name	Qty
A	The unit	1
B	Communication cable	1
C	Parallel communication cable	1
D	User manual	1
E	R-type terminal	1
F	O-type terminal	2
G	External CT	1

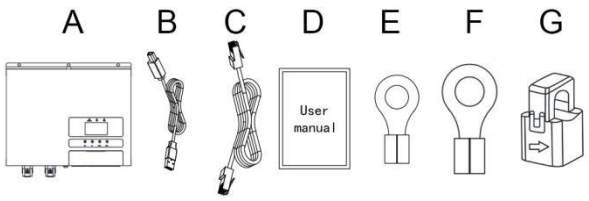

3.2 Mounting The Unit

SUITABLE FOR MOUNTING ON CONCRETE OR OTHER NON-COMBUSTIBLE SURFACE ONLY.

Consider the following points before selecting where to install:

1. Do not mount the inverter on flammable construction materials.
2. Mount on a solid surface
3. Install this inverter at eye level in order to allow the LCD display to be read at all times.
4. The ambient temperature should be between -10°C and 50°C to ensure optimal operation.
5. The recommended installation position is to be adhered to the wall vertically.
6. Be sure to keep other objects and surfaces as shown in the right diagram to guarantee sufficient heat dissipation and to have enough space for removing wires.

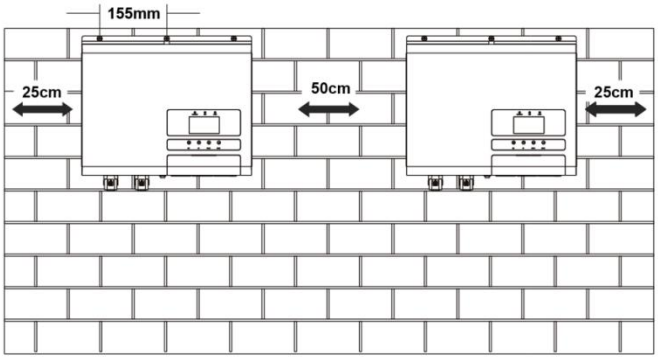

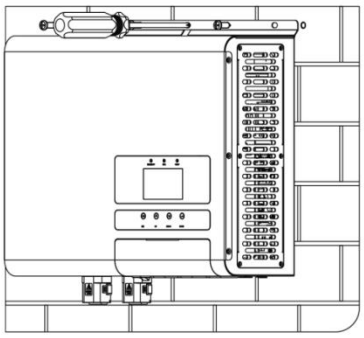

Install the unit by screwing three screws. It's recommended to use M4 or M5 screws.

If the energy storage is installed in areas with salt damage, it will be corroded and may cause fire. Therefore, do not install it outdoors in areas with salt damage. The areas with salt damage are defined as the areas which are not 500m away from shore or will be affected by sea breezes. The areas affected by the sea breezes vary depending on meteorological conditions (e.g. typhoons, monsoons) or topographical conditions (dams, hills).

3.3 Battery Connection

3.31 Lead-acid Battery Connection

User can choose proper capacity lead acid battery with a nominal voltage at 48V. Also, you need to choose battery type as “AGM or FLD”

CAUTION: For safety operation and regulation compliance, it′s requested to install a separate DC over-current protector or disconnect device between battery and inverter. It may not be requested to have a disconnect device in some applications, however, it′s still requested to have over-current protection installed. Please refer to typical amperage in below table as required fuse or breaker size.

WARNING! All wiring must be performed by a qualified person.

WARNING! It's very important for system safety and efficient operation to use appropriate cable for battery connection. To reduce risk of injury, please use the proper recommended cable and terminal size as below.

Recommended battery cable and terminal size:

Model	Typical Amperage	Battery capacity	Wire Size	Ring Terminal			Torque value	
				Cable	Dimensions			
				mm²	D (mm)	L (mm)		
6KW	1 * 2 AWG	＞200AH	1 * 2 AWG	33	6.4	39.2	2-3Nm	

Note:

For lead-acid battery, the recommended charge current is 0.2C(C→battery capacity)

Please follow below steps to implement battery connection:

1. Assemble battery ring terminal based on recommended battery cable and terminal size.
2. Connect all battery packs as units requires. It’s suggested to connect at least 200Ah capacity battery for 6KW.
3. First, pass the battery cable through the protective shell， and then insert the ring terminal of battery cable flatly into battery connector of inverter and make sure the bolts are tightened with torque of 2-3Nm. Make sure polarity at both the battery and the inverter/charge is correctly connected and ring terminals are tightly screwed to the battery terminals. Last, insert the protective shell.

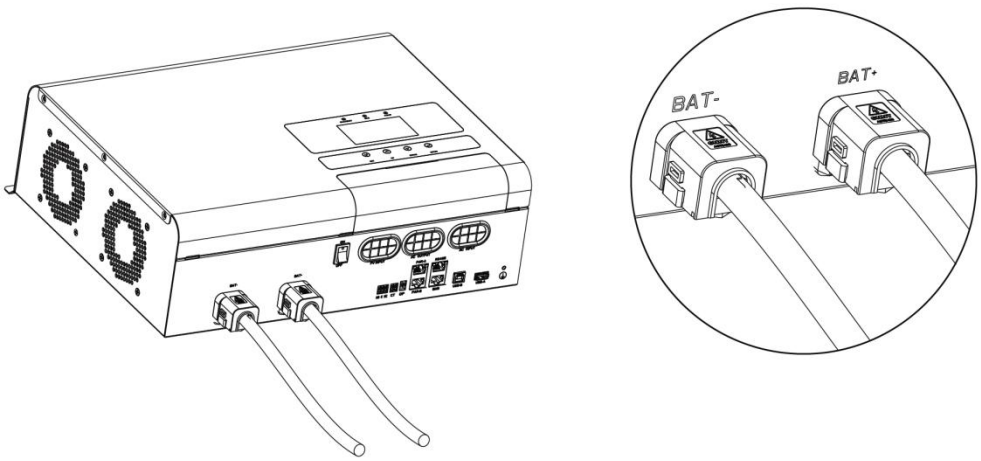

⚠	**CAUTION!!** Do not place anything between the flat part of the inverter terminal and the ring terminal. Otherwise, overheating may occur. **CAUTION!!** Do not apply anti-oxidant substance on the terminals before terminals are connected tightly. **CAUTION!!** Before making the final DC connection or closing DC breaker, be sure positive (+) must be connected to positive (+) and negative (-) must be connected to negative (-). Reverse polarity connection on battery will damage the inverter.

3.32 Lithium Battery Connection

If choosing lithium battery for 6KW, you are allowed to use the lithium battery only which we have configured. There are two types connectors on the lithium battery, communication port of BMS and power cable.

Please follow below steps to implement lithium battery connection:

1. Assemble battery ring terminal based on recommended battery cable and terminal size (same as Lead acid, see section Lead-acid Battery Connection for details) .
2. First，pass the battery cable through the protective shell，and then insert the ring terminal of battery cable flatly into battery connector of inverter and make sure the bolts are tightened with torque of 2-3Nm. Make sure polarity at both the battery and the inverter/charge is correctly connected and ring terminals are tightly screwed to the battery terminals. Last, insert the protective shell.
3. Connect the end of RJ45 of battery to BMS communication port of inverter.
4. The other end of RJ45 insert to battery communication port.

Note: If choosing lithium battery, make sure to connect the BMS communication cable between the battery and the inverter. You need to choose battery type as “lithium battery”.

3.33 Lithium Battery Communication And Setting

In order to communicate with battery BMS, you should set the battery type to “LI” in Program b06, and then set the protocol type. There are several protocols in the inverter. Please get instruction from supplier to choose which protocol to match the BMS.

Connect the end of RJ45 of battery to BMS communication port of inverter

Make sure the lithium battery BMS port connects to the inverter is Pin to Pin, the inverter BMS port pin and RS485 port pin assignment shown as below:

Note: The RS485 port (for expansion) is used for communication expansion and connection to external devices.

Pin number	BMS port	RS485 port (for expansion)
1	RS485B	RS485B
2	RS485A	RS485A
3	--	--
4	CANH	--
5	CANL	--
6	--	--
7	--	--
8	--	--

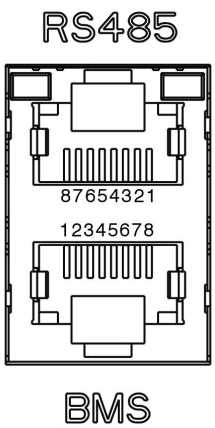

3.34 LCD Setting

To connect battery BMS, need to set the battery type as “LI” in Program b06.

After set “LI” in Program b06, it need to choose communication protocol at the same time. You can choose RS485 communication protocol which is from L01 to L50, and you can also choose CAN communication protocol which is from L51 to L99.

b06	Battery type	AGM bAtt AGM b06
		Flooded bAtt FLd b06
		Lithium (only suitable when communicated with BMS) (default) L52 bAtt LI b06
		User-Defined (suitable for lead-acid battery) bAtt USE b06 If “User-Defined” is selected, battery charge voltage and low DC cut-off voltage can be set up in program b11, b12 and b13. The inverter will charge the battery following the 3-step charging algorithm.
		User-Defined 2（suitable when lithium battery without BMS communication） bAtt US2 b06 If “User-Defined 2” is selected, battery charge voltage and low DC cut-off voltage can be set up in program b11, b12 and b13. It is recommended to set to the same voltage in program b11 and b12(full charging voltage point of lithium battery). The inverter will stop charging when the battery voltage reaches this setting.

Note: When the battery type set to Li, the setting option b09, b10, b13 will change to display percent.

b09	Setting SOC point back to utility source when selecting “SBU” priority” or “SOL” in program b01	b2AC 50% b09 Default 50%, 10%~95% Settable
b10	Setting SOC point back to battery mode when selecting “SBU” priority” or “SOL” in program b01	AC2b 90% b10 Default 95%, 15%~100% Settable

b13	Low DC cut-off SOC If “LI” is selected in program b06, this program can be set up	CUt.y 20% b13 Default 20%, 5%~50% Settable

3.35 Communicating With Battery BMS In Parallel System

If need to use communicate with BMS in a parallel system, you should make sure to connect the BMS communication cable between the battery and one inverter of the parallel system. It’s recommended to connect to the master inverter of the parallel system.

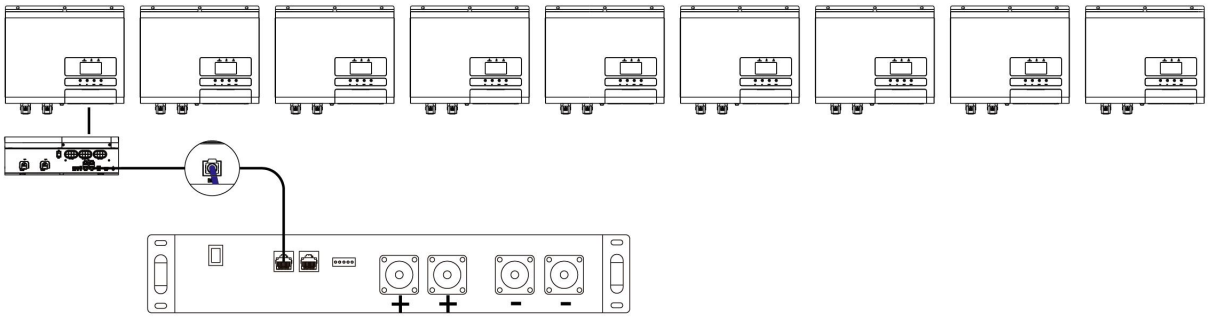

3.4 AC Input/Output Connection

CAUTION!! Before connecting to AC input power source, please install a separate AC breaker between inverter and AC input power source. This will ensure the inverter can be securely disconnected during maintenance and fully protected from over current of AC input. The recommended spec of AC breaker is 50A for 6KW.

CAUTION!! There are four terminal blocks with 〝GRID〞, 〝GEN〞, 〝SMARTLOAD〞 and 〝LOAD〞 markings. Please do NOT mis-connect input and output connectors.

WARNING! All wiring must be performed by a qualified personnel.

WARNING! It’s very important for system safety and efficient operation to use appropriate cable for AC input connection and GEN connection. To reduce risk of injury, please use the proper recommended cable size as below.

Suggested cable requirement for AC wires

Model	Terminal blocks	Wire Size	Cable mm²
6KW	GRID/ GEN	1 * 8 AWG	8.37mm²
	SMARTLOAD/ LOAD/ PE	1 * 10 AWG	5.26mm²

Please follow below steps to implement AC input/output connection:

1. Before making AC input/ output connection, be sure to open protector or disconnector first.
2. Remove insulation sleeve 10mm for conductors.
3. Insert AC input wires according to polarities indicated on terminal block, then fix it with a screwdriver. Be sure to connect PE protective conductor ⏚ first.

⚠	**WARNING:** Be sure that AC power source is disconnected before attempting to hardwire it to the unit.

PE→Ground (yellow-green)

L→LINE (brown or black)

N→Neutral (blue)

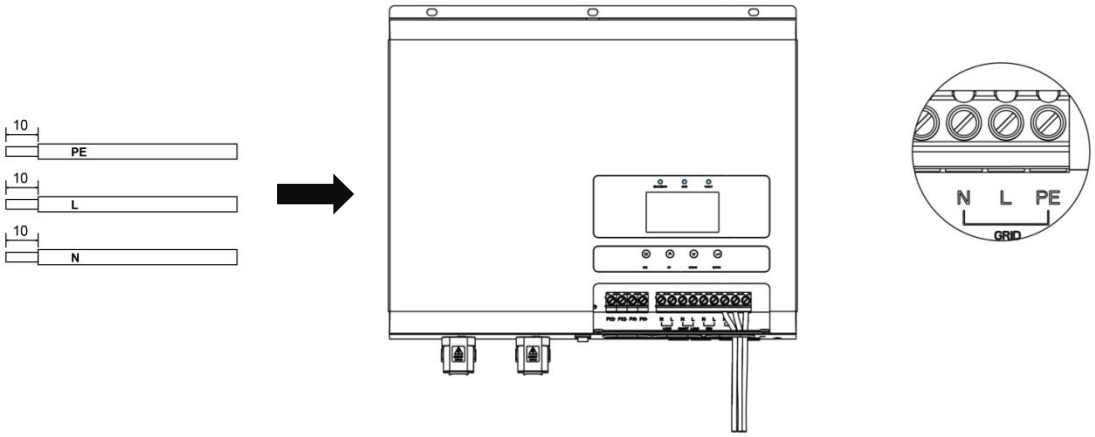

4. Then,insert GEN wires according to polarities indicated on terminal block.

L→LINE (brown or black)

N→Neutral (blue)

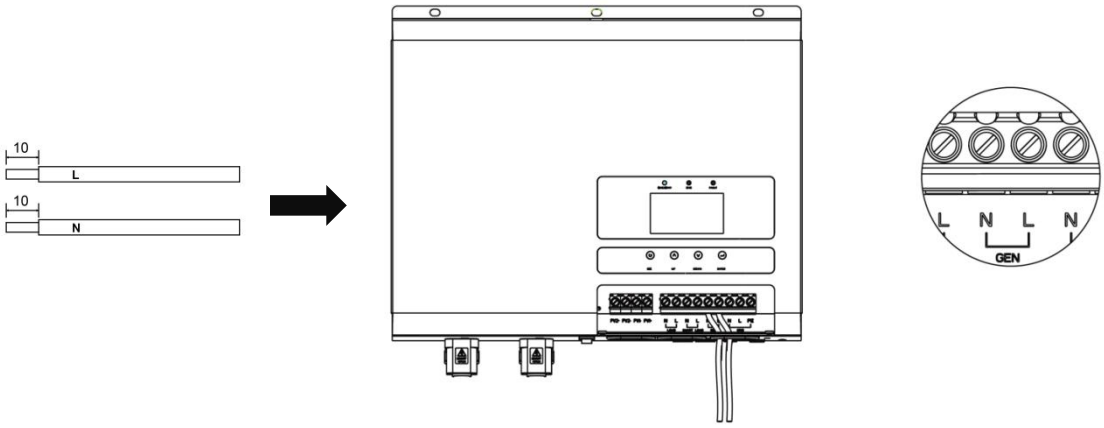

5. Last, insert AC output wires according to polarities indicated on terminal block.

L→LINE (brown or black)

N→Neutral (blue)

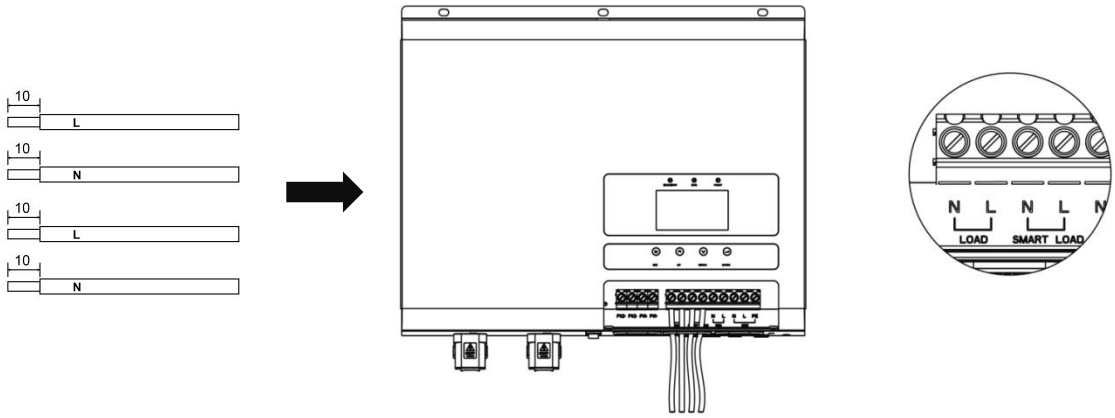

6. Make sure the inverter metal housing is grounded.

   ⏚ →**Ground (yellow-green)**

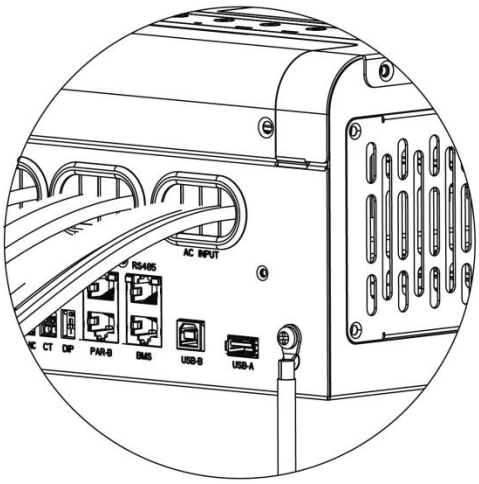

7. Make sure the wires are securely connected.

CAUTION: Important

Be sure to connect AC wires with correct polarity. If L and N wires are connected reversely, it may cause utility short-circuited when these inverters are worked in parallel operation.

CAUTION: Appliances such as air conditioner are required at least 2~3 minutes to restart because it's required to have enough time to balance refrigerant gas inside of circuits. If a power shortage occurs and recovers in a short time, it will cause damage to your connected appliances. To prevent this kind of damage, please check with manufacturer of air conditioner that if it's equipped with time-delay function before installation. Otherwise, this PV Hybrid inverter will trig overload fault and cut off output to protect your appliance but sometimes it still causes internal damage to the air conditioner.

3.5 PV Connection

CAUTION: Before connecting to PV modules, please install a separately DC circuit breaker between inverter and PV modules.

WARNING! All wiring must be performed by a qualified personnel.

WARNING! It′ very important for system safety and efficient operation to use appropriate cable for PV module connection. To reduce risk of injury, please use the proper recommended cable size as below.

Model	Wire Size	Cable mm²
6KW	1 * 12 AWG	3.33mm²

PV Module Selection:

When selecting proper PV modules, please be sure to consider below parameters:

1. Open circuit Voltage (Voc) of PV modules not exceeds max. PV array open circuit voltage of inverter.

2. Open circuit Voltage (Voc) of PV modules should be higher than start-up voltage.

INVERTER MODEL	6KW
Max. PV Array Open Circuit Voltage	500Vdc
Start-up Voltage	100Vdc
PV Array MPPT Voltage Range	65Vdc~450Vdc
No. Of MPP Trackers	2
No. Of Strings MPP Tracker	1+1

Please follow below steps to implement PV module connection:

1. Remove insulation sleeve 10 mm for positive and negative conductors.
2. Insert PV panel positive and negative cables into the terminals, then fix it with a screwdriver.

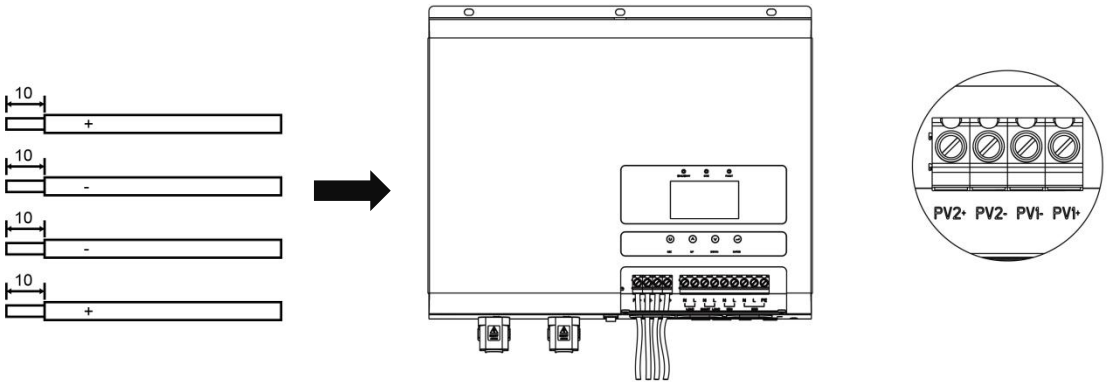

3. Make sure the wires are securely connected.

3.6 Dry Contact Signal

There is one dry contact(3A/250VAC) available on the rear panel. It could be used to deliver signal to external device when battery voltage reaches warning level.

Unit Status	Condition			Dry contact port: NC C NO	
				NC & C	NO & C
Power Off	Unit is off and no output is powered			Close	Open
Power On	Output is powered from Utility			Close	Open
	Output is powered from Battery or Solar	Program b01 set as UTI	Battery voltage (SOC)< Low DC warning voltage(SOC)	Open	Close
			Battery voltage(SOC) > Setting value in Program b10 or battery charging reaches floating stage	Close	Open
		Program b01 is set as SBU or SOL	Battery voltage (SOC)< Setting value in Program b09	Open	Close
			Battery voltage (SOC)> Setting value in Program b10 or battery charging reaches floating stage	Close	Open

3.7 CT Connection

CT specification for parallel system as below:

CT specification	Recommender system
100A-50mA / 2000:1	Single system or 3 pcs three-phase parallel system
100A-50mA / 2000:1	2 pcs single phase parallel or 6 pcs three-phase parallel system
250A-62.5mA / 4000:1	3-5 pcs single phase parallel or 9 pcs three-phase parallel system
500A-66.7mA / 7500:1	6-9 pcs single phase parallel

Note: If the inverter is used in the anti-backflow mode or grid peak shaving mode, an external CT needs to be connected. The specific installation method is as follows:

1. Stand-alone system

The L line passes through the CT, and the arrow on the CT indicates the current, direction points to the inverter. Connect the two signal wires coming out of the CT to the terminal marked CT：

White (or red) cable→Left side of the CT terminal (For the CT-L-I+ signal);

Black cable→Right side of the CT terminal (For the CT-L-I- signal).

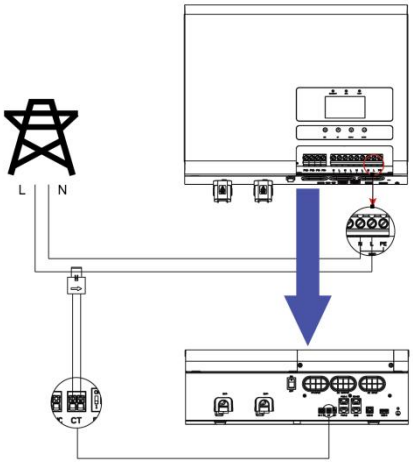

2. Single-phase parallel system

Only one CT needs to be connected to one inverter of the single-phase parallel system. If there are more than 3 pcs inverters in this system, one big CT should be needed for this parallel system in order to detect input current.

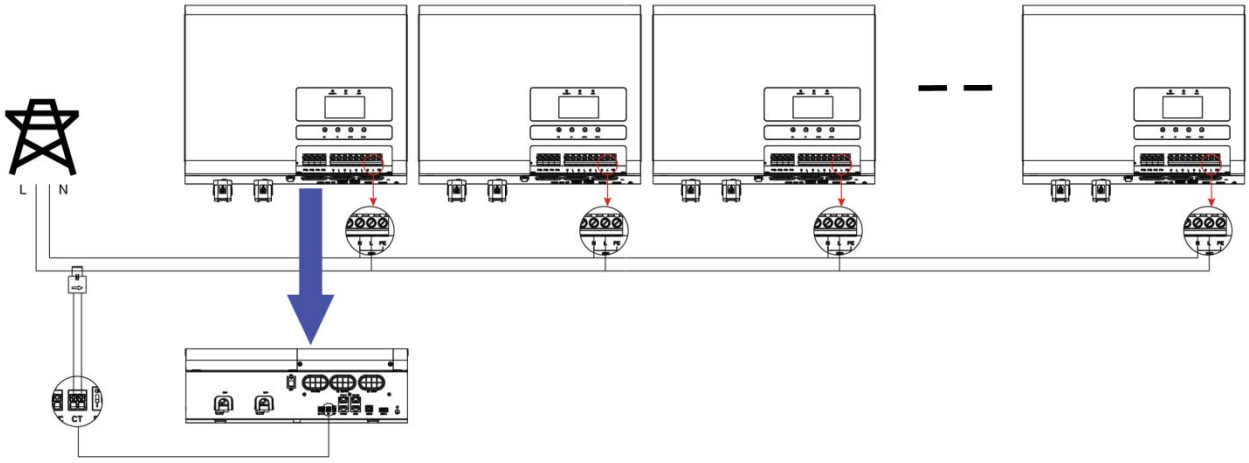

Select one inverter in each of the three phases to connect to the CT. The entire three-phase parallel system requires three external CTs. If one phase of this system has more than 3 pcs inverters, every phase should be changed one big CT which can be detected higher current.

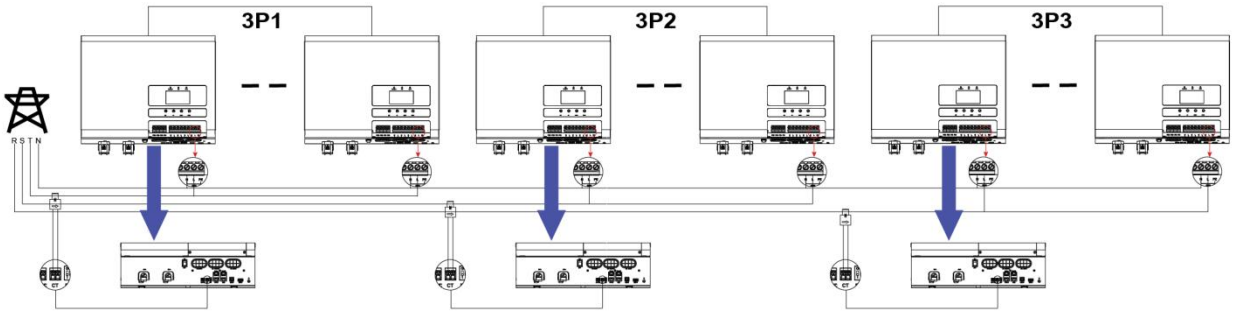

4. Operation

4.1 Power ON/OFF

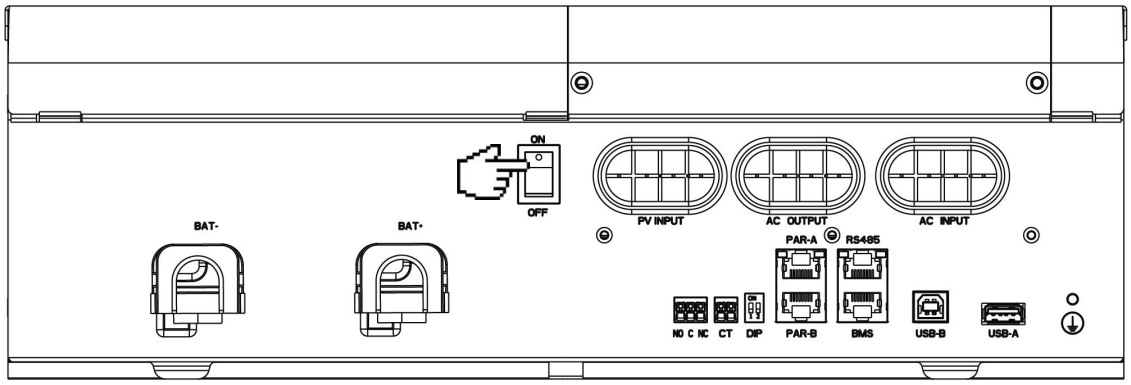

Once the unit has been properly installed and the batteries are connected well, simply press On/Off switch (located on the bottom of the case) to turn on the unit.

4.2 Operation And Display Panel

The operation and display panel, shown in below chart, is on the front panel of the inverter. It includes three indicators, four function keys and a LCD display, indicating the operating status and input/output power information.

1. LCD display
2. Status indicator
3. Charging indicator
4. Fault indicator
5. Function buttons

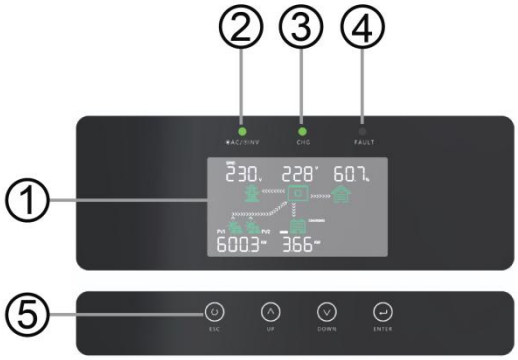

4.21 LED Indicator

LED Indicator			Messages
AC / INV	Green	Solid On	Output is powered by utility in Line mode.
		Flashing	Output is powered by battery or PV in battery mode.
CHG	Green	Solid On	Battery is fully charged.
		Flashing	Battery is charging.
⚠ FAULT	Red	Solid On	Fault occurs in the inverter.
		Flashing	Warning condition occurs in the inverter.

4.22 Function Buttons

Button	Description
ESC	To exit setting mode
UP	To go to previous selection
DOWN	To go to next selection
ENTER	To confirm the selection in setting mode or enter setting mode

4.3 LCD Display Icons

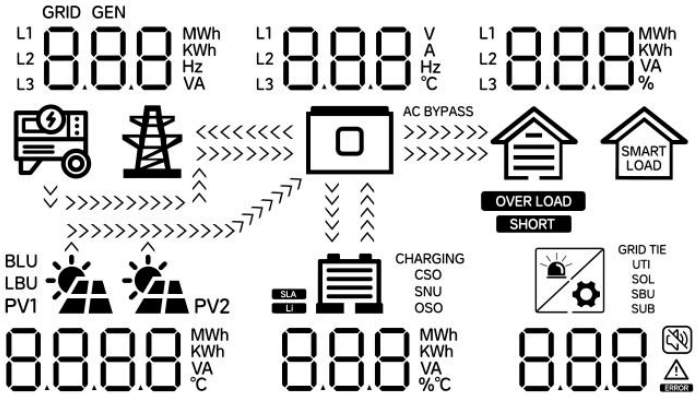

Icon	Description
AC Input Information	
	AC input icon
	Indicate AC input power/ Feed-In Grid power, AC input voltage, AC input frequency, AC input current/ Feed-In Grid current, Total energy feed to grid, etc
AC BYPASS	Indicate AC power loads in bypass
PV Input Information	
	Left：PV1 input icon Right：PV2 input icon
	Indicate PV power, PV voltage, PV current, etc
Output Information	
	Inverter icon
	Indicate output voltage, output current, output frequency, inverter temperature
Load Information	
	Load icon
	Indicate power of load, power percentage of load
OVER LOAD	Indicate overload happened
SHORT	Indicate short circuit happened

Battery Information	
	Indicate battery level by 0-24%, 25-49%, 50-74% and 75-100% in battery mode and charging status in line mode.
888 MWh KWh VA %℃	Indicate battery voltage, battery percentage, battery current
SLA	Indicate SLA battery
Li	Indicate lithium battery
CHARGING CSO SNU OSO	Indicate charging source priority: solar first, solar and utility, or only solar
Other Information	
UTI SOL SBU SUB	Indicate output source priority: solar first, utility first, SBU mode or SUB mode
888 ERROR	Indicate warning code or fault code
	Indicate a warning or a fault is happening
	Indicate it’s during setting values
	Indicate the alarm is disabled

In AC mode, battery icon will present Battery Charging Status		
Status	Battery voltage	LCD Display
Constant Current mode / Constant Voltage mode	<2V/cell	4 bars will flash in turns.
	2 ~ 2.083V/cell	Bottom bar will be on and the other three bars will flash in turns.
	2.083 ~ 2.167V/cell	Bottom two bars will be on and the other two bars will flash in turns.
	> 2.167 V/cell	Bottom three bars will be on and the top bar will flash.
Floating mode. Batteries are fully charged.		4 bars will be on.

In battery mode, battery icon will present Battery Capacity		
Load Percentage	Battery Voltage	LCD Display
Load >50%	< 1.717V/cell	
	1.717V/cell ~ 1.8V/cell	
	1.8 ~ 1.883V/cell	
	> 1.883 V/cell	
50%> Load > 20%	< 1.817V/cell	
	1.817V/cell ~ 1.9V/cell	
	1.9 ~ 1.983V/cell	
	> 1.983	
Load < 20%	< 1.867V/cell	
	1.867V/cell ~ 1.95V/cell	
	1.95 ~ 2.033V/cell	
	> 2.033	

4.4 Display Information

The LCD display information will be switched in turns by pressing "UP" or "DOWN" key. The selectable information is switched as below order: voltage, frequency, current, power, firmware version.

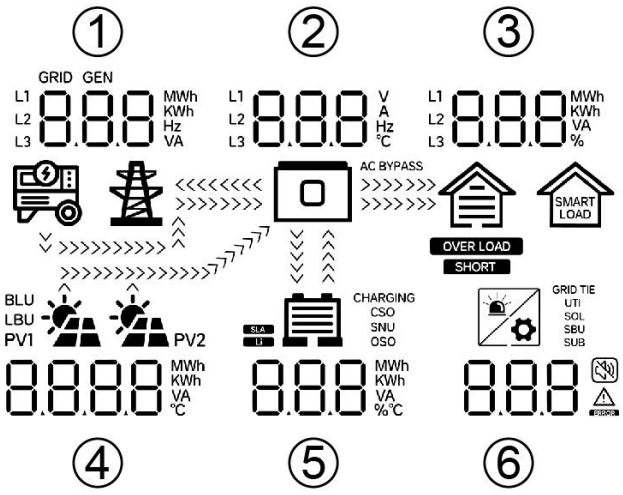

Setting Information	LCD display
① AC Input voltage ② Output voltage ③ Output load percentage ④ PV input voltage ⑤ Battery voltage ⑥ Warning or Fault code (Default Display Screen)	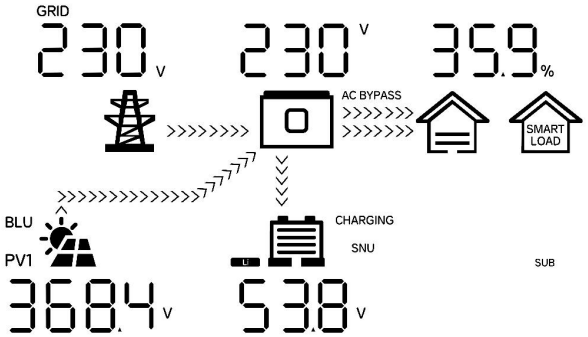
① AC Input frequency ② Output frequency ③ Output load power ④ PV energy sum ⑤ Battery percentage ⑥ Warning or Fault code	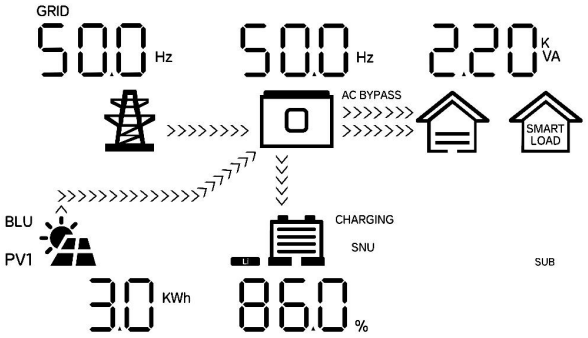
① AC Input current ② Output current ③ Output load percentage ④ PV input current ⑤ Battery charging current ⑥ Warning or Fault code	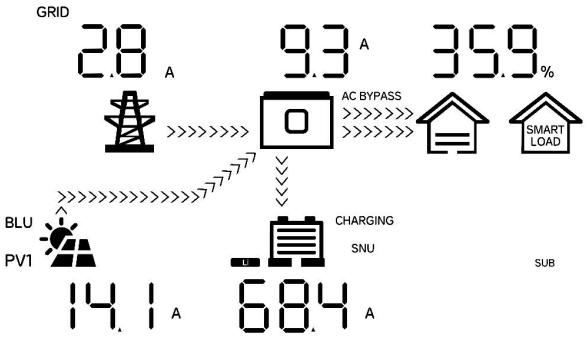
① AC input power ② Temperature ③ Output load power ④ PV input power ⑤ Battery power ⑥ Warning or Fault code	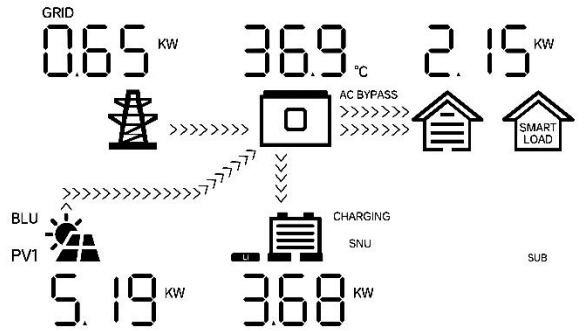
Firmware version (CPU1: 510-001-00A; CPU2: 510-002-00b)	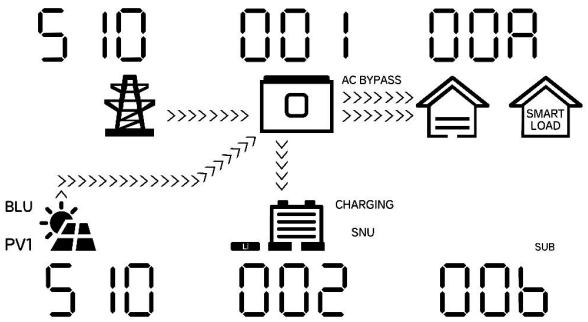

Time (09:10:36, May 10, 2025)	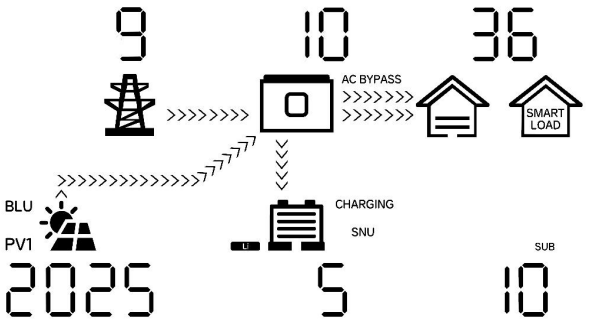
① CT power ② CT1 ③ Home loads add Output load power ④ PV input power ⑤ Battery Power ⑥ Warning or Fault code	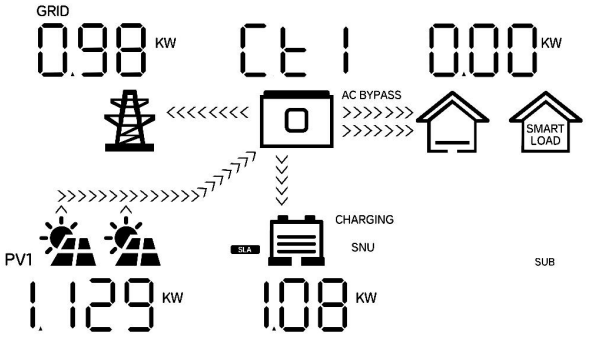
① CT current ② CT2 ③ CT power ④ PV input power ⑤ Battery Power ⑥ Warning or Fault code * the inverter with CT can display this LCD page only	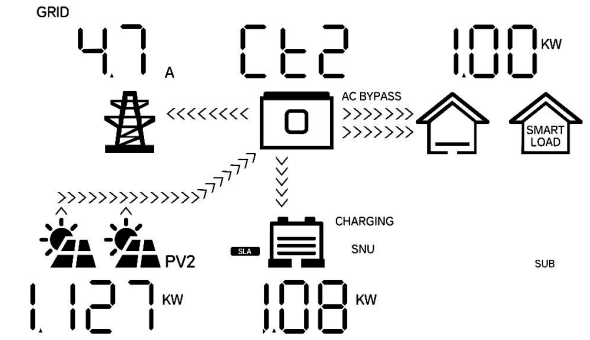

4.5 Operating Mode Description

Operation mode	Description	LCD display	
Standby mode / Power saving mode **Note:** *Standby mode: The inverter is not turned on yet but at this time, the inverter can charge battery without AC output. *Power saving mode: If enabled, the output of inverter will be off when connected load is pretty low or not detected.	No output is supplied by the unit but it still can charge batteries.	Charging by utility and PV energy. 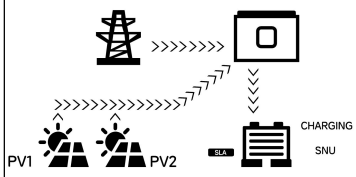	Charging by utility 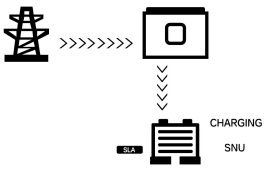
		Charging by PV energy 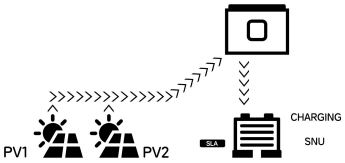	No charging

Fault mode **Note:** *Fault mode: Errors are caused by inside circuit error or external reasons such as over temperature, output short circuited and so on.	PV energy and utility can charge batteries.	Charging by utility and PV energy 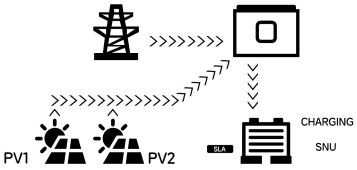	Charging by utility 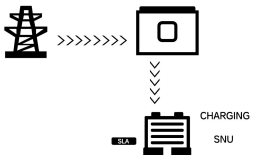
		Charging by PV energy 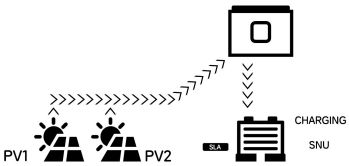	No charging
Line Mode	The unit will provide output power from the mains. It can also charge the battery at line mode.	Charging by PV energy 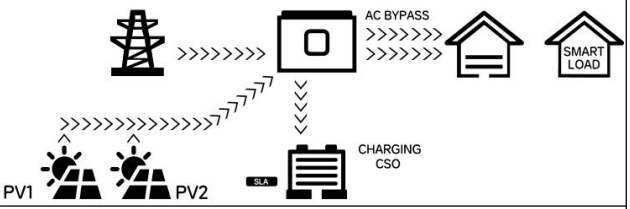	
		Charging by utility 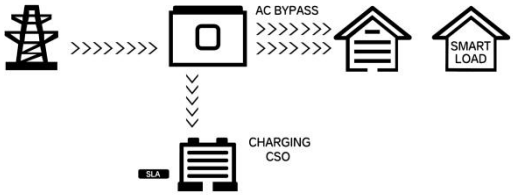	
		No battery connected 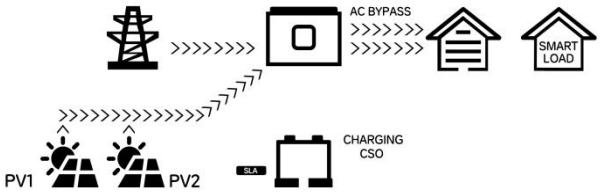	
		PV energy charges battery, PV energy provides power to the load and feeds remaining energy to the grid. 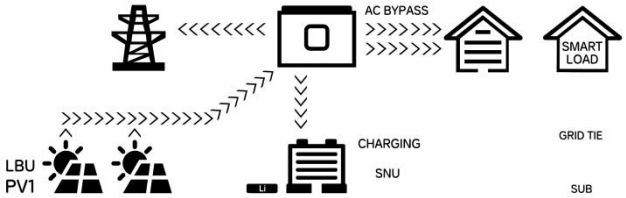	
		Battery energy provides power to the load and feeds remaining energy to the grid. 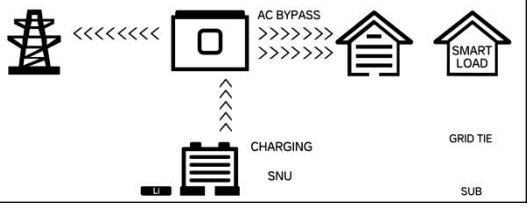	

Battery Mode	The unit will provide output power from battery and PV power.	Power from battery and PV energy 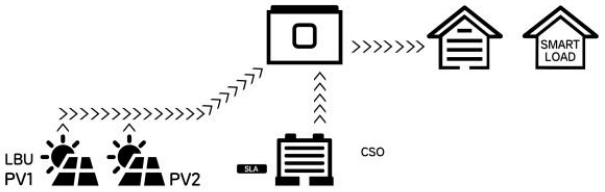 Power from battery only 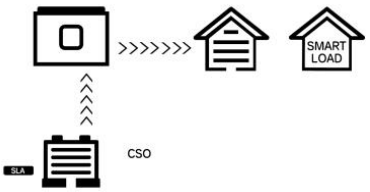

4.6 LCD Basic Setting

After pressing and holding ENTER button for **1** seconds, the unit will enter into the **Basic Setting Mode**. Press “UP” or “DOWN” button to select setting programs. Then press “ENTER” button to confirm the selection or ESC button to exit.

<table>
<tr><th>Program</th><th>Description</th><th>Setting Option</th></tr>
<tr><td rowspan="2">b00</td><td rowspan="2">Fast setting
* After setting FS1, FS2 , FS3 the initial default values of some settings will be changed. Users can set them based on actual usage, which can help users quickly set the inverter settings</td><td>FS1：Economic Mode
ECO FS1 b00
<table>
<tr><th>b01</th><th>b02</th><th>b03</th><th>b04</th><th>b06</th></tr>
<tr><td>SBU</td><td>OSO</td><td>100A</td><td>AC-0A
GEN-60A</td><td>Li-L52</td></tr>
<tr><th>b07</th><th>b08</th><th>b09</th><th>b10</th><th>b13</th></tr>
<tr><td>230V</td><td>50Hz</td><td>25%</td><td>50%</td><td>15%</td></tr>
</table>
This mode is mainly designed to save electricity costs, suitable for scenarios with stable municipal power supply but high electricity prices.
When PV power is sufficient, the solar energy provides power to the output loads as first priority. If solar energy is not sufficient to power all connected loads, battery will supply power to the loads at the same time. Utility provides power to the loads only when battery voltage drops to either low-level warning voltage or the setting point in program b09, Solar energy will charge battery as first priority.</td></tr>
<tr><td>FS2: Commercial Mode
bSNS FS2 b00
<table>
<tr><th>b01</th><th>b02</th><th>b03</th><th>b04</th><th>b06</th></tr>
<tr><td>SOL</td><td>OSO</td><td>100A</td><td>AC-80A
GEN-80A</td><td>Li-L52</td></tr>
<tr><th>b07</th><th>b08</th><th>b09</th><th>b10</th><th>b13</th></tr>
<tr><td>230V</td><td>50Hz</td><td>50%</td><td>95%</td><td>15%</td></tr>
</table></td></tr>
</table>

<table>
<tr><td rowspan="2"></td><td rowspan="2"></td><td>This mode focuses on cutting electricity costs and ensuring stable power supply, ideal for stores, hotels, farms and similar scenarios.
PV power supplies the load first, and excess PV energy charges the battery. When PV power is insufficient, the battery supplements power.In combined load operation mode, utility power cuts in to supply the load when battery SOC drops below 50%, while PV energy charges the battery. After charging to 95%, the utility is cut off and converted into PV or PV combined battery to provide load energy.</td></tr>
<tr><td>FS3：Fast Charging Mode
FCHG FS3 b00
<table><tr><th>b01</th><th>b02</th><th>b03</th><th>b04</th><th>b06</th></tr><tr><td>SUB+BLU</td><td>SNU</td><td>100A</td><td>AC-80A
GEN-80A</td><td>Li-L52</td></tr><tr><th>b07</th><th>b08</th><th>b09</th><th>b10</th><th>b13</th></tr><tr><td>230V</td><td>50Hz</td><td>/</td><td>/</td><td>15%</td></tr></table>This mode focuses on ensuring all-day power consumption, suitable for areas with power rationing or unstable municipal power supply.
When there is no utility, the inverter supplies power to loads with photovoltaic power first; if PV power is insufficient, PV and batteries jointly supply the loads. When utility is available, PV power is prioritized for battery charging while utility feeds the loads. Excess PV power will jointly supply loads together with utility, and the battery remains non-discharging.</td></tr>
<tr><td rowspan="4">b01</td><td rowspan="4">Output source priority
To configure load power source priority.
(After program A01 is enabled, this program will be fixed SUB and other output source priority cannot be set.)</td><td>Solar first
OPPr SOL b01</td></tr>
<tr><td>Solar energy provides power to the loads as first priority.
If solar energy is not sufficient to power all connected loads, battery
energy will supply power the loads at the same time.
Utility provides power to the loads only when any one condition happens:
- Solar energy is not available
- Battery voltage drops to either low-level warning voltage or the setting point in program b09.</td></tr>
<tr><td>Utility first
OPPr UtI b01</td></tr>
<tr><td>Utility will provide power to the loads as first priority.
Solar and battery energy will provide power to the loads only when utility power is not available.</td></tr>
<tr><td></td><td>SBU priority
OPPr SbU b01</td></tr>
</table>

		Solar energy provides power to the loads as first priority. If solar energy is not sufficient to power all connected loads, battery will supply power to the loads at the same time. Utility provides power to the loads only when battery voltage drops to either low-level warning voltage or the setting point in program b09.	
		SUB priority(default) It needs to set solar energy supply priority when selecting "SUB priority" in this program.	Charging battery first Solar energy provides power to charge battery as first priority, and provides power to the loads as second priority, and provides power to feed to grid as third priority. bLU BLU PV1 OP.Pr SUb b01 SUB
			Load first (default) Solar energy provides power to the loads as first priority, and provides power to charge battery as second priority, and provides power to feed to grid as third priority. LbU LBU PV1 OP.Pr SUb b01 SUB
		Solar energy provides power to the loads as first priority. If solar energy is not sufficient to power all connected loads, solar and utility will power loads at the same time. Battery provides power to the loads only when solar energy is not sufficient and there is no utility. It needs to set solar energy supply priority when selecting "SUB priority" in this program.	
b02	**Charger source priority** To configure charger source Priority. (After program A01 is enabled, this program is fixed SNU and cannot be set.)	Solar first CHARGING CSO CG.Pr CSO b02	Solar energy will charge battery as first priority. Utility will charge battery only when solar energy is not available.
		Solar and Utility (default) CHARGING SNU CG.Pr SNU b02	Solar energy and utility will both charge battery.

		Only Solar CGPr 050 b02	Solar energy will be the only charger source no matter utility is available or not.
b03	**Maximum charging current** Set total charging current for solar and utility chargers. (Max. charging current = utility charging current + solar charging current)	CHG CUr L 150 A 100 A b03 Default 60A, 0A~100A Settable *If Program b06 is set to Li mode. The value LXXX in the lower left corner of the LCD is the maximum allowable charge current of the lithium battery. The middle value is to set the maximum allowable charge current value of the battery. The smaller of the two is the current limit value of the battery charging.	
b04	**Maximum utility/generator charging current**	ACI 30 A GEN 30 A b04 Default 30A, 0A~80A Settable Note: If setting value in Program b03 is smaller than that in Program b04, the inverter will apply charging current from Program b03 for utility or generator charger	
b05	**AC input voltage range** (After program A01 is enabled, this program is fixed UPS and cannot be set).	Appliance (default) ACU APL b05 If selected, acceptable AC input voltage range will be within 90~280VAC	
		UPS ACU UPS b05 If selected, acceptable AC input voltage range will be within 170~280VAC	
b06	**Battery type**	AGM bAtt AGM b06	
		Flooded bAtt FLd b06	

		Lithium (default) (only suitable when communicated with BMS) LS2 bAtt LI b06	
		User-Defined (suitable for lead-acid battery) bAtt USE b06 If “User-Defined” is selected, battery charge voltage and low DC cut-off voltage can be set up in program b11, b12 and b13. The inverter will charge the battery following the 3-step charging algorithm.	
		User-Defined 2 (suitable when lithium battery without BMS communication) bAtt US2 b06 If “User-Defined 2” is selected, battery charge voltage and low DC cut-off voltage can be set up in program b11, b12 and b13. It is recommended to set to the same voltage in program b11 and b12(full charging voltage point of lithium battery). The inverter will stop charging when the battery voltage reaches this setting.	
		No battery mode (suitable for no battery use) bAtt NOb b06 If "No battery" is selected, LCD screen won't display no battery alarm when in no battery using.	
b07	**Output voltage** *This setting is only available when the inverter is in standby mode (Switch off)	230V (default) OUtV 230V b07	220V OUtV 220V b07
		240V OUtV 240V b07	208V OUtV 208V b07
b08	**Output frequency** *This setting is only available when the inverter is in standby mode (Switch off)	50Hz (default) OUtF 50 b08	60Hz OUtF 60 b08

b09	**Setting voltage/SOC point back to utility source when selecting "SBU priority" or "Solar first" in program b01**	b2AC 46.0 v b09 Default 46.0V/50%, 44.0V~51.2V/10%~95% Settable
b10	**Setting voltage/SOC point back to battery mode when selecting "SBU priority" or "Solar first" in program b01**	AC2b 54.0 v b10 Default 54.0V/95%, 48.0V~58.0V/15%~100% Settable
b11	**C.V. charging voltage** If User-Defined or User-Defined 2 is selected in program b06, this program can be set up	C.V 56.4 v b11 Default 56.4V, 48.0V~58.4V Settable
b12	**Floating charging voltage** If User-Defined or User-Defined 2 is selected in program b06, this program can be set up	FLt.V 54.0 v b12 Default 54.0V, 48.0V~58.4V Settable
b13	**Low DC cut-off voltage/SOC** If Lithium or User-Defined or User-Defined 2 is selected in program b06, this program can be set up. Low DC cut-off voltage will be fixed to setting value no matter what percentage of load is connected	CUt.V 42.0 v b13 Default 42.0V/20%, 40.0V~48.0V/5%-50% Settable When reach Low DC cut-off voltage/SOC: 1) If battery power is only power source available, inverter will shut down. 2) If PV energy and battery power are available, inverter will charge battery without AC output. 3) If PV energy, battery power and utility are all available, inverter will transfer to line mode and provide output power to loads, and charge the battery at the same time.
b14	**AC output mode** *This setting is only available when the inverter is in standby mode (Switch off) **Note:** Parallel operation can only work when battery connected	Parallel:(default) PrLL PAL b14 L1 Phase: PrLL 3P1 b14 L2 Phase: PrLL 3P2 b14 L3 Phase: PrLL 3P3 b14 When the units are used in parallel with single phase, please select "PAL" in program b14. It requires 3 inverters to support three-phase equipment, 1 inverter in each phase. Please select "3P1" in program b14 for the inverters connected to L1 phase, "3P2" in program b14 for the inverters connected

		to L2 phase and “3P3” in program b14 for the inverters connected to L3 phase.	
b16	**Auto restart when overload occurs**	Restart disable (default) LdrS dIS b16	Restart enable LdrS ENA b16
b17	**Auto restart when over temperature occurs**	Restart disable (default) trrS dIS b17	Restart enable trrS ENA b17
b19	**Alarm control**	Alarm on (default) bUZZ ON b19	Alarm off bUZZ OFF b19
b20	**Beeps while primary source is interrupted**	Alarm on (default) ALAr ON b20	Alarm off ALAr OFF b20
b21	**Overload bypass** When enabled, the unit will transfer to line mode if overload occurs in battery mode	Bypass disable (default) byP dIS b21	Bypass enable byP ENA b21
b22	**Real time setting---Year**	5 10 2025 b22	Default 2025, range 2000~2099
b23	**Real time setting---Month**	5 10 mON 5 b23	Default 01, range 01~12
b24	**Real time setting---Date**	5 10 dAY 10 b24	Default 01, range 01~31
b25	**Real time setting---Hour**	10 47 25 HOUr 10 b25	Default 00, range 00~23
b26	**Real time setting---Minute**	10 47 25 mIN 47 b26	Default 00, range 00~59

b28	**Battery equalization**	Battery equalization enable E9 ENA b28	Battery equalization disable(default) E9 dIS b28
		If “Flooded” or “User-Defined” is selected in program b06, this program can be set up.	
b29	**Battery equalization voltage**	E9.V 58.4V b29 Default 58.4V, 48.0V~58.4V Settable	
b30	**Battery equalized time**	mIn E9.t 60 b30	Default 60min, 5min~900min Settable
b31	**Battery equalized timeout**	mIn E9.t0 120 b31	Default 120min, 5min~900min Settable
b32	**Equalization interval**	dAY E9.I 30 b32	Default 30days, 1 days~90 days Settable
b33	**Equalization activated immediately**	Equalization activated Immediately on E9 ON b33	Equalization activated immediately off(default) E9 OFF b33
		If equalization function is enabled in program b28, this program can be setup. If “On” is selected in this program, it’s to activate battery equalization immediately and LCD main page will shows “E9”. If “Off” is selected, it will cancel equalization function until next activated equalization time arrives based on program b32 setting. At this time, “E9” will not be shown in LCD main page.	
b34	**Utility charging time** * Note: When time period 1 is set to "Sta0000-End0000", it means that the utility can charge all time periods (This program can only be effective when program A01 is not enabled)	First time period (default: Sta0000-End0000) CHG tIm 1800 001 b34	Utility charging start time 1800 StA b34 Utility charging end time 1800 End b34

		Second time period CHG tim 1800 002 b34	Utility charging start time 1800 StA b34 Utility charging end time 1800 End b34
		Third time period CHG tim 1800 003 b34	Utility charging start time 1800 StA b34 Utility charging end time 1800 End b34
		The time allows utility to charge the battery. The time setting consists of 4 digits, with the first two digits representing hours and the last two digits representing minutes. For example, Sta2300-End2100 represents the time allows utility to charge the battery from 23:00 to 21:00 the next day.	
b35	**Utility output time** * Note: When time period 1 is set to "Sta0000-End0000", it means that the utility can output all time periods (This program can only be set when program A01 is not enabled)	First time period (default: Sta0000-End0000) byP tim 1800 001 b35	Utility output start time 1800 StA b35 Utility output end time 1800 End b35
		Second time period byP tim 1800 002 b35	Utility output start time 1800 StA b35 Utility output end time 1800 End b35
		Third time period byP tim 1800 003 b35	Utility output start time 1800 StA b35 Utility output end time 1800 End b35
		The time allows utility to power the load. The time setting consists of 4 digits, with the first two digits representing hours and the last two digits representing minutes. For example, Sta2300-End2100 represents the time allows	

		utility to power the load is from 23:00 to 21:00 the next day.	
b36	**Fault restart function**	Enable FrSt ENA b36	The inverter can automatically restart after reporting a fault.
		Disable(default) FrSt dIS b36	The inverter cannot automatically restart after reporting a fault.
b37	**Lithium battery full charge interval setting**	Enable(default) dAY 30 INt FCHG ENA b37	Disable Default 30 days, 1~90 days settable dAY 30 INt FCHG dIS b37
		If program b06 is set to Li and this program is set to enable, it means that the lithium battery is periodically forced to charge to SOC of 100%. Disable indicates that the function is not enable	
b38	**The power grid mode allows the smart load output to remain on**	Enable GrD MOd OP2 ENA b38	Disable(default) GrD MOd OP2 dIS b38
b39	**Setting of the smart load output time period** * Note: When time period 1 is set to "Sta0000-End0000", it means that the smart load can output all time periods	First time period OP2 tIM 0800 001 b39	Smart load output start time 0800 StA b39 Smart load output end time 0800 End b39
		Second time period OP2 tIM 0800 002 b39	Smart load output start time 0800 StA b39 Smart load output end time 0800 End b39
		Third time period	Smart load output start time 0800 StA b39

		OP2 tim 0800 003 b39	Smart load output end time 0800 End b39
		The time setting consists of 4 digits, with the first two digits representing hours and the last two digits representing minutes. For example, Sta2300-End2100 represents the smart load output time range from 23:00 to 21:00 the next day.	
b40	**The cut-off battery voltage point/ SOC setting for the smart load output**	OP2 LOSS 48.0v b40 Default 48.0V, 44.0V~54.0V Settable Lithium battery mode：Default 60%, 15%~95% Settable	
b41	**Recovery battery voltage point/ SOC setting for the smart load output**	OP2 bACK 52.0v b41 Default 53.0V, 48.0V~58.0V Settable Lithium battery mode：Default 90%, 20%~100% Settable	
b42	**Setting the smart load Output to be turned on immediately**	On (Turned on the smart load immediately) OP2 ON b42	
		Off (default) The inverter will turn on the smart load following the program b38, b39, b40, b41 OP2 OFF b42	
b43	**Generator run time**	GEN run tim HOUr 24 b43	Default 00, range 00~24 The time allows Generator to work. Use 2 digits to represent the time period, setting range from 00 to 24 (eg: 02 represents the time allows generator to run for two hours.） **Note:** 00 represents that the generator can run continuously.
b44	**The BMS communication loss, allowing the inverter works continuously**	Enable (default) bmSE ENA b44	If BMS communication loss, the inverter 02 and 06 warning icon flashing, but enable to work for original status without charging.

		Disable bmSE dIS b44	If BMS communication loss, the inverter 02 and 06 warning icon flashing and disable to work. (Cut off the output and can't charge)
b45	**Address setting** (for expansion)	AddR 1 b45 Default 1, 1~255 Settable	
b46	**Dustproof alarm clear**	ArM dUSt OFF b46 When alarm 13 is appeared, set this program off will clear this alarm	
b99	**Reset to factory settings** (Will not reset the battery type of the program b06)	Reset：Press the "ENTER" button twice to confirm the selection, then press "ESC" to return and complete the settings. EE rSt b99	

4.7 LCD Advance Setting

After pressing and holding ENTER button for **5** seconds, the unit will enter into the **Advance Setting Mode**. Press "UP" or "DOWN" button to select setting programs. Then press "ENTER" button to confirm the selection or ESC button to exit.

<table>
<tr><td rowspan="2">A00</td><td rowspan="2">Fast setting
* After setting FT0, FT1 or FT2 the initial default values of some settings will be changed. Users can set them based on actual usage, which can help users quickly set the inverter settings</td><td>FT0：Self-consumption mode
SELF FtO A00
<table><tr><th>b01</th><th>b02</th><th>b05</th><th>b09</th><th>b10</th></tr><tr><td>SBU</td><td>CSO</td><td>APL</td><td>46.0V/50%</td><td>54.0V/95%</td></tr><tr><th>A01</th><th>A02</th><th>A11</th><th>A14</th><th></th></tr><tr><td>DIS</td><td>DIS</td><td>DIS</td><td>DIS</td><td></td></tr></table>When PV power is sufficient, the solar energy provides power to the output loads as first priority. If solar energy is not sufficient to power all connected loads, battery will supply power to the loads at the same time.
Utility provides power to the loads only when battery voltage drops to either low-level warning voltage or the setting point in program b09.
Solar energy will charge battery as first priority. Utility will charge battery only when solar energy is not available.</td></tr>
<tr><td>FT1: On grid mode
ONG Ft1 A00
<table><tr><th>b01</th><th>b02</th><th>b05</th><th>A01</th></tr><tr><td>SUB+LBU</td><td>SNU</td><td>UPS</td><td>ENA</td></tr><tr><th>A02</th><th>A04</th><th>A05</th><th>A06</th></tr><tr><td>ENA</td><td>6KW</td><td>140A</td><td>Serial 1: 6.0KW
Serial 2: 6.0KW
Serial 3: 6.0KW</td></tr></table></td></tr>
</table>

		Serial 4: 6.0KW Serial 5: 6.0KW
A07	**A08**	**A09**	**A10**
Serial 1: 51.2V/ 80% Serial 2: 51.2V/ 80% Serial 3: 51.2V/ 80% Serial 4: 51.2V/ 80% Serial 5: 51.2V/ 80%	Serial 1: 54V/ 85% Serial 2: 54V/ 85% Serial 3: 54V/ 85% Serial 4: 54V/ 85% Serial 5: 54V/ 85%	Serial 1: 08:00~11:59 Serial 2: 12:00~15:59 Serial 3: 16:00~18:59 Serial 4: 19:00~23:59 Serial 5: 00:00~07:59	Serial 1: 00:00~00:00 Serial 2: 06:00~07:59 Serial 3: 20:00~23:59
A11	**A13**		
DIS	0KW		

When PV power is sufficient, the PV energy first prioritizes supplying power to the on/off grid load，the excess PV energy is used to charge the battery, after that any surplus PV energy will feed into the grid. Conversely, When PV power is insufficient, both the PV energy and battery energy are used to supply power to the on/off-grid load, and any surplus battery or PV energy will feed into the grid.

Since there is no grid charging time, the grid can not charge the battery.

FT2：Export limit to home loads mode

2.OUt FtZ A00

b01	**b02**	**b05**	**A01**
SUB+LBU	SNU	UPS	ENA
A02	**A04**	**A05**	**A06**
ENA	6KW	140A	Serial 1: 6.0KW Serial 2: 6.0KW Serial 3: 6.0KW Serial 4: 6.0KW Serial 5: 6.0KW
A07	**A08**	**A09**	**A10**
Serial 1: 46V/ 40% Serial 2: 46V/ 40% Serial 3: 46V/ 40% Serial 4: 46V/ 40% Serial 5: 46V/ 40%	Serial 1: 48V/ 45% Serial 2: 48V/45% Serial 3: 48V/ 45% Serial 4: 48V/45% Serial 5: 48V/45%	Serial 1: 08:00~11:59 Serial 2: 12:00~15:59 Serial 3: 16:00~18:59 Serial 4: 19:00~23:59 Serial 5: 00:00~07:59	Serial 1: 00:00~00:00 Serial 2: 06:00~07:59 Serial 3: 20:00~23:59
A11	**A13**		
ENA	0KW		

When PV power is sufficient, the PV energy first prioritizes supplying power to the on/off grid load. Any surplus energy is used to charge the battery, and the excess PV energy is not fed into the grid. Conversely, when PV power is insufficient, both the PV energy and the battery discharge together to power the on/off grid load. However, the battery and PV energy is not fed into the grid.

Since there is no grid charging time, the grid can not charge the battery.

External CT sensor required for this mode, the installation method of the external CT sensor please refer to chapter 3.7 CT connection.

A01	Feed enable set	Feed to grid enable FEEd ENA A01	Solar energy feed to grid enable.

		Feed to grid disable (default) FEEd dIS A01	Solar energy feed to grid disable.
A02	Battery feed enable set	Battery feed to grid enable bAt FEEd ENA A02	Battery energy feed to grid enable.
		Battery feed to grid disable(default) bAt FEEd dIS A02	Battery energy feed to grid disable.
A03	Feed law set	Standard(default) FrNG Std A03	Grid-connected voltage range: 150~270VAC. Grid-connected frequency range: 47~51.5Hz.
		South Africa FrNG SAF A03	Grid-connected voltage range: 195.5~253VAC. Grid-connected frequency range: 47~52Hz.
		Pakistan FrNG PAK A03	Grid-connected voltage range: 185~275VAC. Grid-connected frequency range: 47~52Hz.
		Europe FrNG EUr A03	Grid-connected voltage range: 184~264.5VAC. Grid-connected frequency range: 47.5~51.5Hz.
A04	Feed power set *Note: The power feed into the grid.	POW FEEd 6.0KW A04 Default 6KW, 0KW~6KW Settable	

A05	Battery feed current set	bAt FEd CUr L 120A 140A A05 Default 140A, 0A~140A Settable *If Program b06 is set to Li mode. The value LXXX in the lower left corner of the LCD is the maximum allowable discharge current of the lithium battery. The middle value is to set the maximum allowable discharge current value of the battery. The smaller of the two is the current limit value of the battery feed grid.	
A06	Battery feed power set①	bAt FEd POW SEr.1 6.0KW A06 Default 6.0KW, 0KW~6.0KW Settable There are five serials for this parameter.	
A07	Battery feed loss voltage/ SOC ①	bAt FEd LOS SEr.1 46.0V A07	bAt FEd LOS SEr.1 40% A07
		Lead acid battery mode: Default 46.0V, 46.0V~52.0V Settable Lithium battery mode: Default 40%, 15%~95% Settable There are five serials for this parameter.	
A08	Battery feed back voltage/ SOC ①	bAt FEd bAC SEr.1 54.0V A08	bAt FEd bAC SEr.1 80% A08
		Lead acid battery mode: Default 54.0V, 48.0V~54.0V Settable Lithium battery mode: Default 80%, 20%~100% Settable There are five serials for this parameter.	
A09	Battery feed time set ①	Battery feed start time bAt Fdt StA 08.00 Sr.1 A09	Battery feed end time bAt Fdt End 18.00 Sr.1 A09

		There are five serials for this parameter. When time period 1 is set to "Sta0000-End0000", it means battery will be discharge all time periods.	
A10	Grid charge time set *Note: After program A01 is enabled, the grid will charge battery following this program's schedule.	Grid charging start time GrdCGtStA 1900 Sr.1 A10	Grid charging end time GrdCGtEnd 0600 Sr.1 A10
		There are five serials for this parameter. When time period 1 is set to "Sta0000-End0000", it means that the utility will not charge all time periods.	
A11	Anti-backflow function set	Enable anti-backflow function AntiEnA A11	Disable anti-backflow function (default) AntidIS A11
A12	External CT ratio set	2000 CtrA12 Default 2000, 1000~15000 Settable. For example, 2000 means the sampling ratio is 1:2000 For example, C000 means the sampling ratio is 1:12000	
A13	Anti-backflow power set *Note: After program A10 is enabled, the power of this program will take effect. This power means that in the anti-backflow state, the excess PV energy will be fed to the grid at a maximum power not exceeding this setting.	AntPOW 0.0kW A13 Default 0kW, 0~6.0kW Settable *For example, the anti-backflow power is set to 2KW. Single: The anti-backflow power is 2KW; Single-phase parallel: If the number of parallel machines is (n)PCS, the total anti-backflow power of the parallel system is (2 * n)KW; Three-phase parallel: If the number of three-phase parallel machines is (x/y/z) PCS, the anti-backflow power of each phase line is (2 * x /2 * y /2 *z) KW.	
A16	Feed voltage range set	FEdVLt 254V 195V A16 High voltage loss protection point can be set range: 240-280Vac, default 270Vac. Low voltage loss protection point can be set range: 150-200Vac, default 150Vac.	

A17	Feed frequency range set	FEd 50Hz Fr9 51.5 47.0 A17 High frequency loss protection point can be set range: 51.0-55.0Hz, default 51.5Hz. Low frequency loss protection point can be set range: 45.0-49.0Hz, default 47Hz.	
A18	Ground voltage check enable set	Enable ground detection function (default) GNd ENA A18	Disable ground detection function GNd dIS A18
A19	NG relay enable set (Neutral line and grounding together in off grid mode)	NG relay enable(default) NGrY ENA A19	NG relay disable NGrY dIS A19

① : There are five serials for this parameter in order to adapt five serials battery feed time set.

5. Battery Equalization

Equalization function is added into charge controller. It reverses the buildup of negative chemical effects like stratification, a condition where acid concentration is greater at the bottom of the battery than at the top. Equalization also helps to remove sulfate crystals that might have built up on the plates. If left unchecked, this condition, called sulfation, will reduce the overall capacity of the battery. Therefore, it's recommended to equalize battery periodically.

- **How to Apply Equalization Function**

You must enable battery equalization function in monitoring LCD setting program b28 first. Then, you may apply this function in device by either one of following methods:

1. Setting equalization interval in program b32.
2. Active equalization immediately in program b33.

- **When to Equalize**

In float stage, when the setting equalization interval (battery equalization cycle) is arrived, or equalization is active immediately, the controller will start to enter Equalize stage.

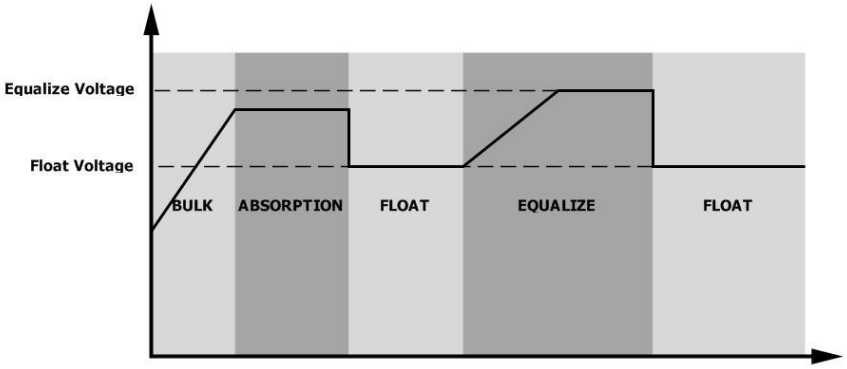

- **Equalize charging time and timeout**

In Equalize stage, the controller will supply power to charge battery as much as possible until battery voltage raises to battery equalization voltage. Then, constant-voltage regulation is applied to maintain battery voltage at the battery equalization voltage. The battery will remain in the Equalize stage until setting battery equalized time is arrived.

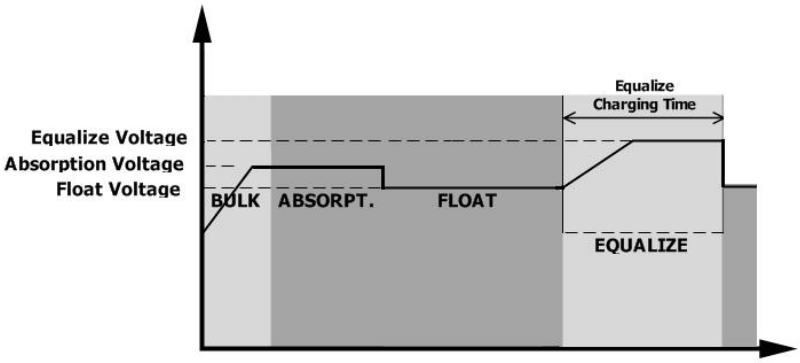

However, in Equalize stage, when battery equalized time is expired and battery voltage doesn't rise to battery equalization voltage point, the charge controller will extend the battery equalized time until battery voltage achieves battery equalization voltage. If battery voltage is still lower than battery equalization voltage when battery equalized timeout setting is over, the charge controller will stop equalization and return to float stage.

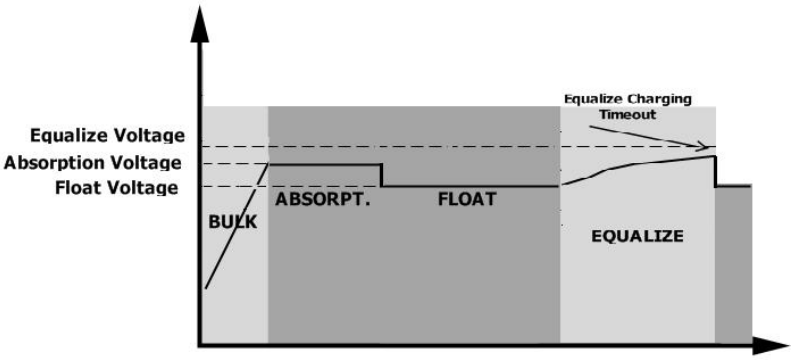

6. Warning Indicator

Warning Code	Warning Event	Audible Alarm	Icon flashing
01	Battery is over-charged	Beep once every second	01 ⚠
02	Low battery	Beep once every second	02 ⚠
05	Battery disconnect	No beep	05 ⚠
06	BMS communication error	Beep once every second	06 ⚠
10	Fan is locked when inverter is on	Beep once every 3 seconds	10 ⚠
11	Over temperature	Beep once every second	11 ⚠
13	Dustproof time out	Beep once every second	13 ⚠
14	Grounding abnormal	Beep once every second	14 ⚠
22	BUS over current	Beep once every second	22 ⚠
32	Overload	Beep once every 0.5 second	32 ⚠
33	Output power de-rating	Beep twice every 3 seconds	33 ⚠
40	Solar charger stops due to overload	Beep once every second	40 ⚠
41	PV power insufficient	Beep once every second	41 ⚠
60	The input status is different in parallel system	Beep once every second	60 ⚠
61	Parallel input phase error	Beep once every second	61 ⚠
62	Parallel output phase loss	Beep once every second	62 ⚠
63	Parallel forbidden without battery	Beep once every second	63 ⚠
64	The parallel version is different	Beep once every second	64 ⚠
65	Parallel inverters' capacity different	Beep once every second	65 ⚠
66	Inconsistent switches	Beep once every second	66 ⚠
68	Host loss	Beep once every second	68 ⚠

7. Fault Reference Code

Fault Code	Fault Event	Icon on
01	Battery voltage is too high	01 ERROR
03	Battery input over current	03 ERROR
04	LLC over current	04 ERROR
11	Over temperature	11 ERROR
12	Internal communication error	12 ERROR
20	Bus voltage is too high	20 ERROR
21	Bus soft start failed	21 ERROR
23	Bus voltage is too low	23 ERROR
30	Output short circuited	30 ERROR
31	Output voltage is too high	31 ERROR
32	Overload time out	32 ERROR
34	Output voltage is too low	34 ERROR
35	DCI failed	35 ERROR
37	Over DC voltage in AC output	37 ERROR
38	Main relay check fail	38 ERROR
42	PV voltage is too high	42 ERROR
43	ISO check fail	43 ERROR
50	Over current or surge	50 ERROR
51	Inverter soft start failed	51 ERROR
52	Negative power fault	52 ERROR
53	GFCI check fail	53 ERROR
67	CAN fault	67 ERROR

8. Parallel Installation Guide

8.1 Introduction

This inverter can be used in parallel with two different operation modes.

1. Parallel operation in single phase with up to 9 units.
2. Maximum 9 units work together to support 3-phase equipment. Seven units support one phase maximum.

8.2 Package Contents

In parallel kit, you will find the following items in the package:

Parallel communication cable

8.3 Mounting The Unit

When installing multiple units, please follow below chart.

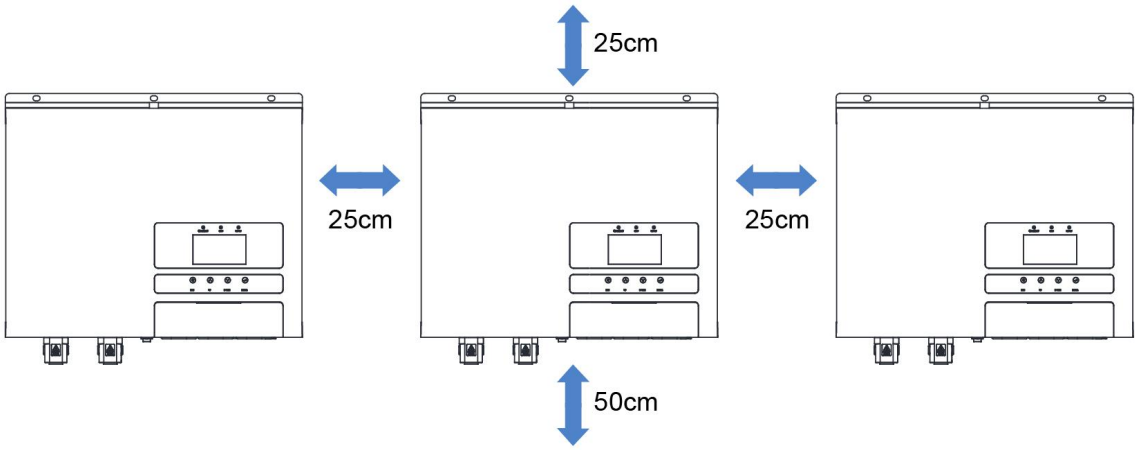

Note: For proper air circulation to dissipate heat, allow a clearance of approx. 25cm to the side and above approx. 50 cm below the unit. Be sure to install each unit in the same level.

8.4 Wiring Connection

The cable size of each inverter is shown as below

Recommended battery cable and terminal size for each inverter:

Model	Typical Amperage	Wire Size	Ring Terminal			Torque value	
			Cable mm²	Dimensions D (mm)	Dimensions L (mm)		
6KW	1 * 2 AWG	1 * 2 AWG	33	6.4	39.2	2-3Nm	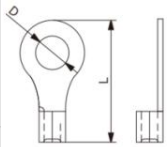

WARNING: Be sure the length of all battery cables is the same. Otherwise, there will be voltage difference between inverter and battery to cause parallel inverters not working.

You need to connect the cables of each inverter together. Take the battery cables for example: You need to use a connector or bus-bar as a joint to connect the battery cables together, and then connect to the battery terminal. The cable size used from joint to battery should be X times cable size in the tables above. "X" indicates the number of inverters connected in parallel.

Regarding AC input and output, please also follow the same principle.

Recommended AC input and output cable size for each inverter:

Model	Terminal blocks	Cable mm²	Cable mm²
6KW	GRID/ GEN	1 * 8 AWG	8.37mm²
	SMARTLOAD/ LOAD/ PE	1 * 10 AWG	5.26mm²

CAUTION!! Please install the breaker at the battery and AC input side. This will ensure the inverter can be securely disconnected during maintenance and fully protected from over current of battery or AC input.

Recommended breaker specification of battery for each inverter:

Model	1 unit*
6KW	200A / 60VDC

*If you want to use only one breaker at the battery side for the whole system, the rating of the breaker should be X times current of 1 unit. "X" indicates the number of inverters connected in parallel.

Recommended breaker specification of AC input with single phase:

Model	2 units	3 units	4 units	5 units	6 units
6KW	100A/230VAC	150A/230VAC	200A/230VAC	250A/230VAC	300A/230VAC

Note1: You can use 50A breaker for 6KW for only 1 unit, and each inverter has a breaker at its AC input.

Note2: Regarding three phase system, you can use 4 poles breaker, the rating is up to the current of the phase which has the maximum units.Or you can follow the suggestion of note 1.

Recommended battery capacity

Inverter parallel numbers	2	3	4	5	6	7	8	9
Battery Capacity	400AH	600AH	800AH	1000AH	1200AH	1400AH	1600AH	1800AH

WARNING! Be sure that all inverters will share the same battery bank. Otherwise, the inverters will transfer to fault mode.

8.5 Parallel Operation In Single Phase

WARNING! All inverters must be connected to the same batteries and ensure each group of cables from the inverters to the batteries in the same length.

Two inverters in parallel:

Power Connection

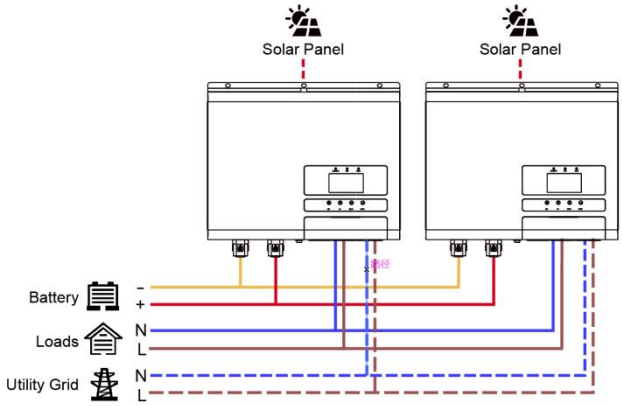

Communication Connection

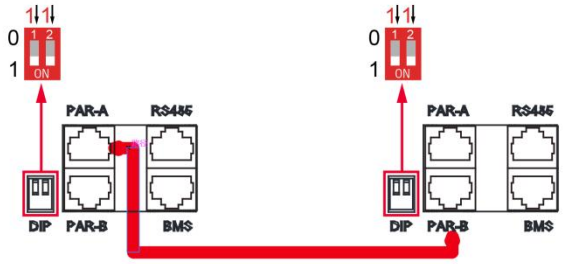

WARNING! Make sure that PAR-A of one inverter is connected to the PAR-B of another inverter. No matter single or three-phase parallel.

NOTE: Please put the CAN communication DIP to on status for the first and the end inverter.

Three inverters in parallel:

Power Connection

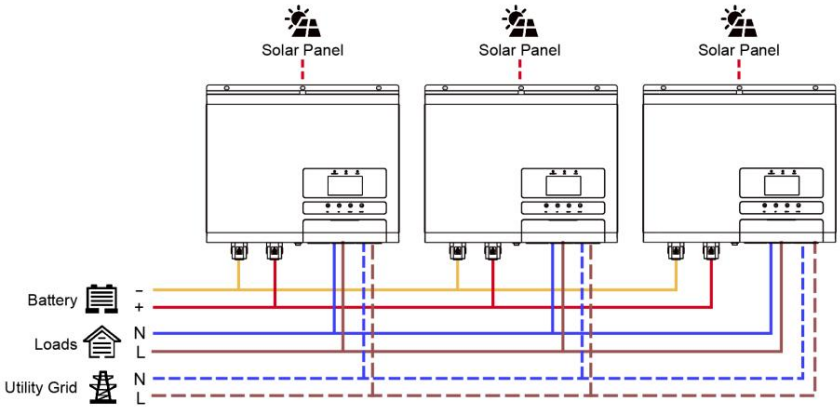

Communication Connection

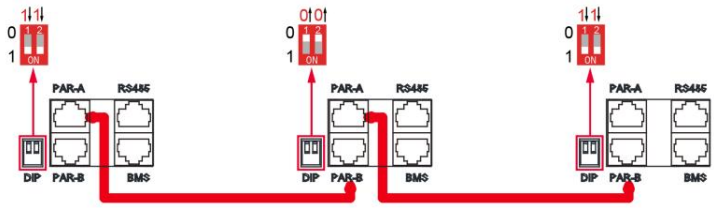

Six inverters in parallel:

Power Connection

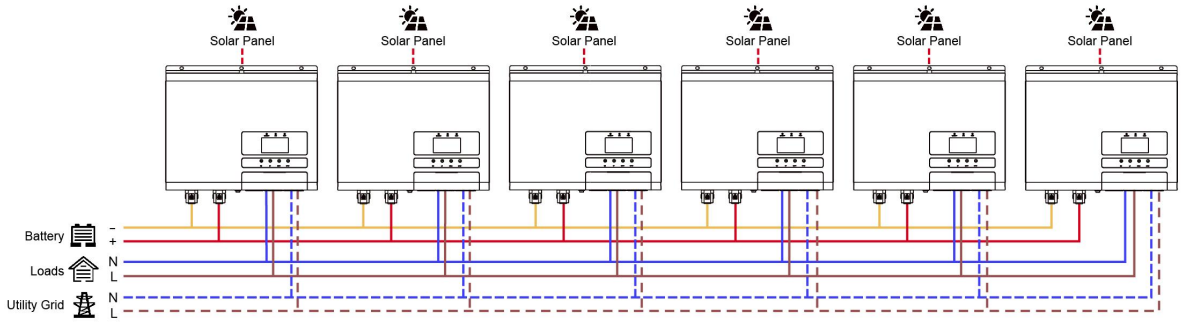

Communication Connection

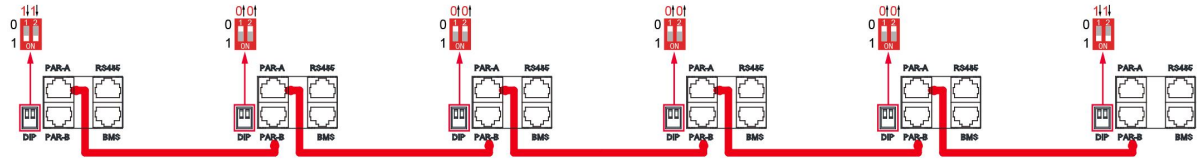

Nine inverters in parallel:

Power Connection

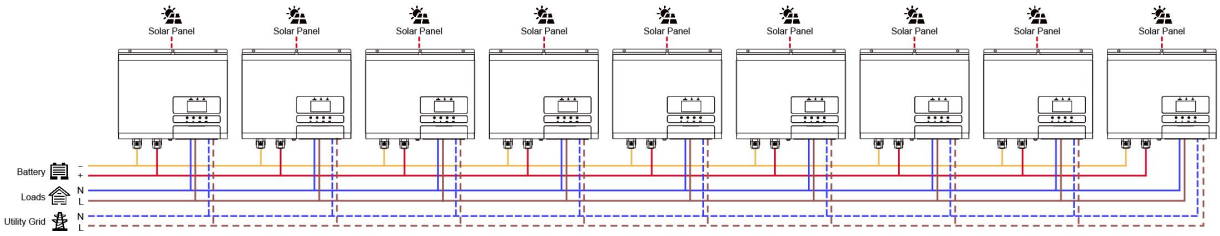

Communication Connection

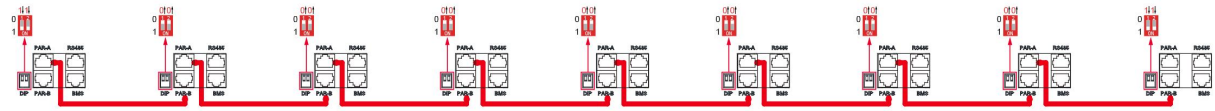

8.6 Parallel Operation In Three Phase

WARNING! All inverters must be connected to the same batteries and ensure each group of cables from the inverters to the batteries in the same length.

One inverter in each phase:

Power Connection

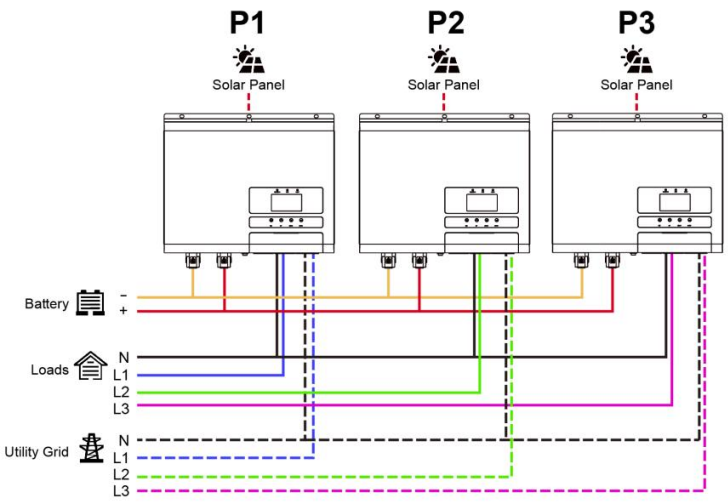

Communication Connection

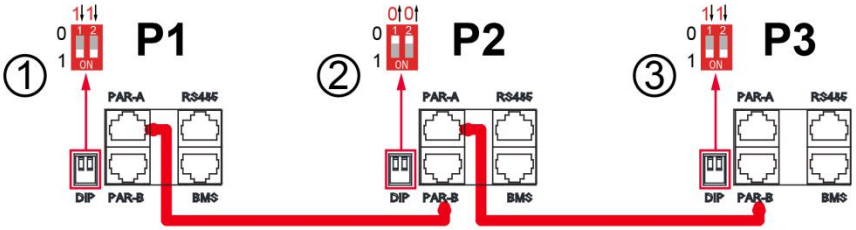

Two inverters in one phase and only one inverter for the remaining phases:

Power Connection

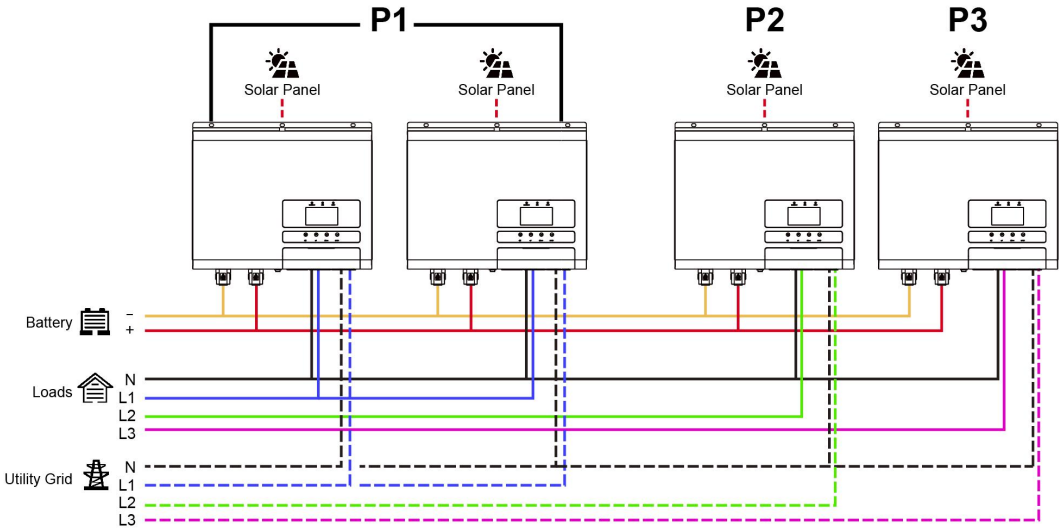

Communication Connection

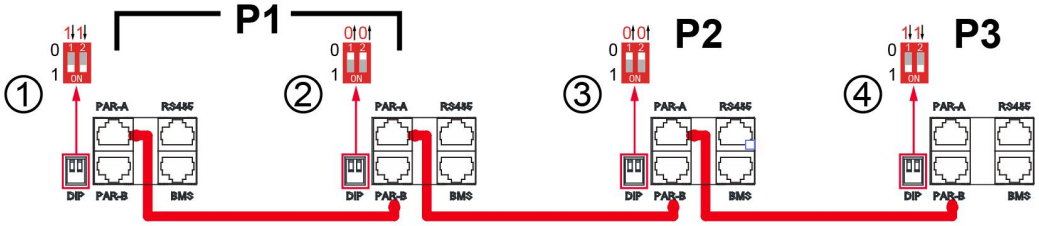

Two inverters in each phase:

Power Connection

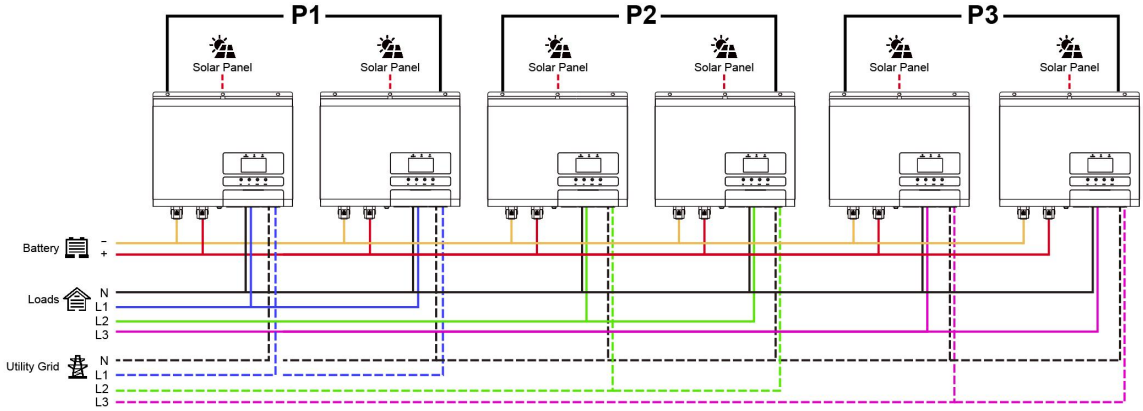

Communication Connection

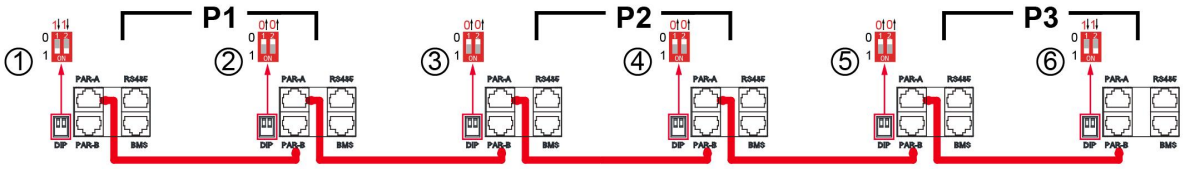

Three inverters in each phase:

Power Connection

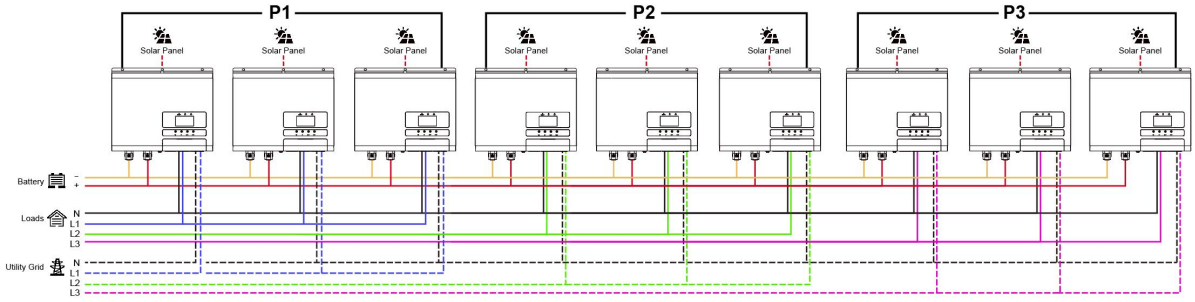

Communication Connection

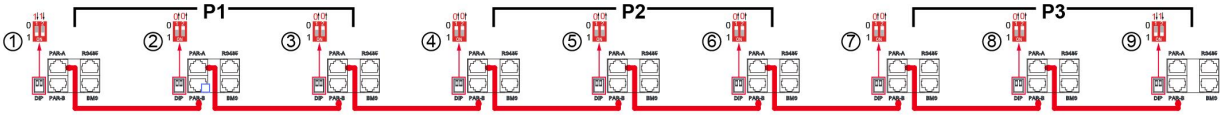

8.7 PV Connection

Please refer to user manual of single unit for PV Connection on Page 11.

CAUTION: Each inverter should connect to PV modules separate.

8.8 LCD Setting And Display

Refer to Program b14 on Page 27

8.81 Parallel In Single Phase

Step 1: Check the following requirements before commissioning:

- Correct wire connection
- Ensure all breakers in Line wires of load side are open and each Neutral wires of each unit are connected together.

Step 2: Turn on each unit and set “PAL” in LCD setting program b14 of each unit. And then shut down all units.

Note: It’s necessary to turn off switch when setting LCD program. Otherwise, the setting can not be programmed.

Step 3: Turn on each unit.

LCD display in Master unit	LCD display in Slave unit
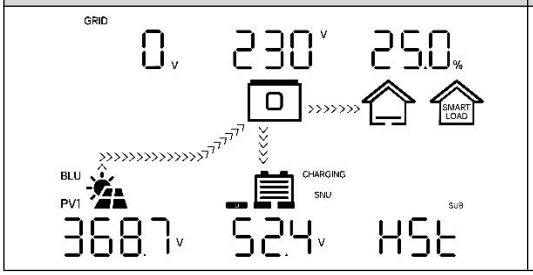	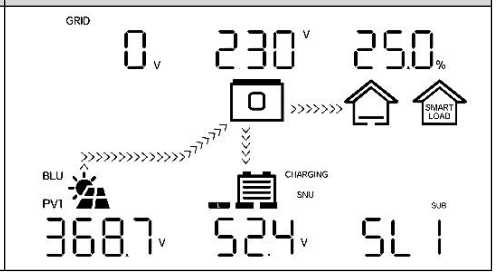

Note: Master and slave units are randomly defined.

Step 4: Switch on all AC breakers of Line wires in AC input. It’s better to have all inverters connect to utility at the same time. If not, it will display warning 60.

LCD display in Master unit	LCD display in Slave unit
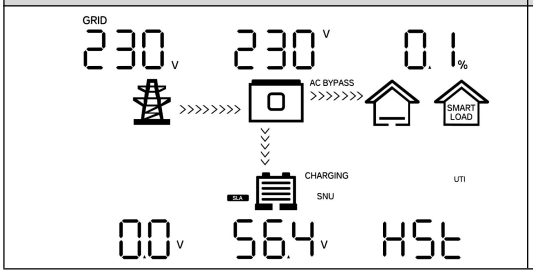	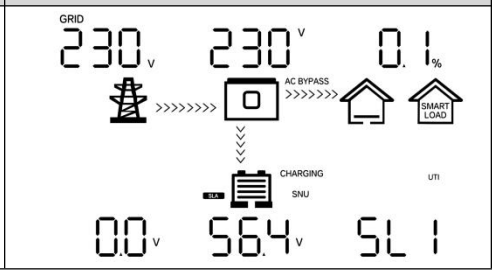

Step 5: If there is no more fault alarm, the parallel system is completely installed.

Step 6: Please switch on all breakers of Line wires in load side. This system will start to provide power to the load.

8.82 Parallel In Three Phase

Step 1: Check the following requirements before commissioning:

- Correct wire connection
- Ensure all breakers in Line wires of load side are open and each Neutral wires of each unit are connected together.

Step 2: Turn on all units and configure LCD program b14 as P1, P2 and P3 sequentially. Then shut down all units.

Note: It's necessary to turn off switch when setting LCD program. Otherwise, the setting can not be programmed.

Step 3: Turn on all units sequentially. Please turn on HOST inverter first, then turn on the rest one by one.

LCD display in L1-phase unit	LCD display in L2-phase unit	LCD display in L3-phase unit
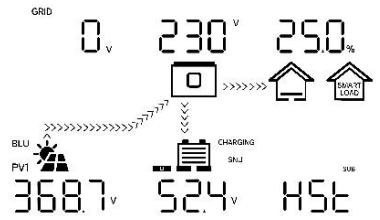	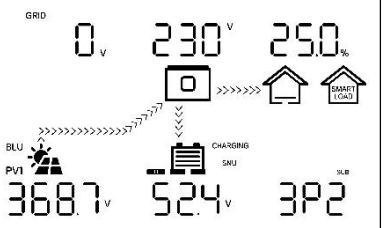	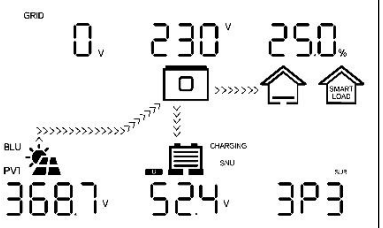

Step 4: Switch on all AC breakers of Line wires in AC input. If AC connection is detected and three phases are matched with unit setting, they will work normally. Otherwise, they will display warning 60/61 and will not work in the line mode.

LCD display in L1-phase unit	LCD display in L2-phase unit	LCD display in L3-phase unit
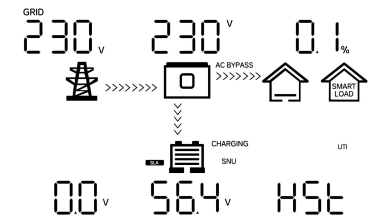	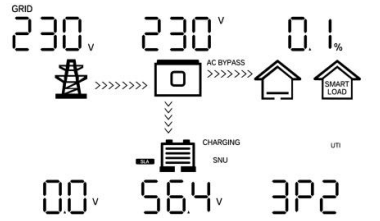	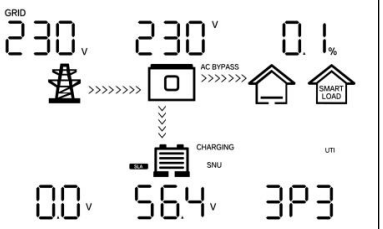

Step 5: If there is no more fault alarm, the system to support 3-phase equipment is completely installed.

Step 6: Please switch on all breakers of Line wires in load side. This system will start to provide power to the load.

Note 1: If there's only one inverter in L1-phase, the LCD will show as "HST". If there is more than one inverter in L1-phase, the LCD of the HOST inverter will show as "HST", the rest of L1-phase inverters will show as "3P1".

Note 2: To avoid overload occurring, before turning on breakers in load side, it's better to have whole system in operation first.

Note 3: Transfer time for this operation exists. Power interruption may happen to critical devices, which cannot bear transfer time.

9. Regular Maintenance

WARNING! Make sure that the inverter is disconnected from power.

WARNING! Wear personal protective equipment when operating the inverter.

Maintenance instructions:

Maintain content	Maintenance methods	Maintenance Cycle
System cleaning	Check for foreign objects and dust on the air inlet/outlet.	Once/Three months *The inverter will alarm warning code 13 every 3 months to remind system cleaning. After you complete the cleaning, you can set the program b46 to off to clear the alarm code.
Electrical connection	Check whether the cable connection is loose or detached, whether the appearance of the cable is damaged, and whether there is copper leakage.	Once/Half a year~Once/Year

10. Specifications

Table 1 Grid/Generator Input Mode Specifications

INVERTER MODEL	6KW
Input Voltage Waveform	Sinusoidal (utility or generator)
Nominal Input Voltage	230Vac
Low Loss Voltage	170Vac±7V (UPS); 90Vac±7V (Appliances)
Low Loss Return Voltage	180Vac±7V (UPS); 100Vac±7V (Appliances)
High Loss Voltage	280Vac±7V
High Loss Return Voltage	270Vac±7V
Max AC Input Voltage	300Vac
Max. AC Input current	40A
Overload Protection	10S, @ > 45Aac or 10kW Grid or GEN input 1min, @ > 40A or 9kW Grid or GEN input
Nominal Input Frequency	50Hz / 60Hz (Auto detection)
Low Loss Frequency	40±1Hz
Low Loss Return Frequency	42±1Hz
High Loss Frequency	65±1Hz
High Loss Return Frequency	63±1Hz
Efficiency (Line Mode)	>95% (Rated R load, battery full charged)
Max. AC Charging Current	80Amp
Transfer Time	10ms typical, 20ms Max@ Single <30ms @ Parallel
Output power de-rating: When AC input voltage drops to 170V, the output power will be de-rated.	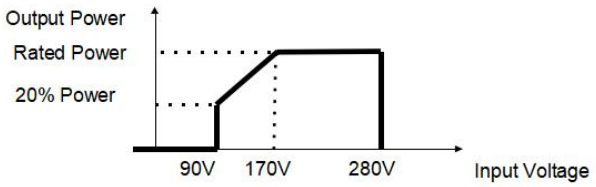

Table 2 Grid Feeding Mode Specifications

INVERTER MODEL	6KW
Nominal Output Voltage	230Vac
Nominal Output Frequency	50Hz / 60Hz (Auto Detection)
Max Feeding Power	6000W
Output Voltage Range	150~270VAC(±3%)@Standard regulation(Default) 184.0~264.5VAC(±3%)@Europe regulation 195.5~253.0VAC(±3%)@South Africa regulation 185.0~275.0VAC(±3%)@Pakistan regulation
Operational Frequency Range	47.0~51.5Hz(±0.1Hz)@Standard regulation(Default) 47.5~51.5Hz(±0.1Hz)@Europe regulation 47.0~52.0Hz(±0.1Hz)@South Africa regulation 47.0~52.0Hz(±0.1Hz)@Pakistan regulation
Output Current	27A
O/P Current Distortion	＜5%
O/P Current DC Component	＜150mA
Power Factor	0.8 Leading To 0.8 Lagging
Max. Conversion Efficiency (PV/AC)	96.5%
European Efficiency@ Vnominal (PV/AC)	95.5%

Table 3 Inverter Mode Specifications

INVERTER MODEL	6KW
Rated Output Power	6KVA/6KW
Output Voltage Waveform	Pure Sine Wave
Output Voltage Regulation	230Vac±5%
Output Frequency	50Hz or 60Hz
Nominal Output Current	27A
Overload Protection	5s@≥150% load; 10s@110%~150% load
Surge Capacity	2* rated power for 5 seconds
Maximum Smartload Power	6KW
Nominal DC Input Voltage	48Vdc
Operating Range	38.4Vdc-60Vdc
Cold Start Voltage (Lead-Acid Mode)	46.0Vdc
Cold Start SOC(Li Mode)	Default 30%, Low DC Cut-off SOC +10%
Low DC Warning Voltage (Lead-Acid Mode)	44.0Vdc @ load < 20% 42.8Vdc @ 20% ≤ load < 50% 40.4Vdc @ load ≥ 50%
Low DC Warning Return Voltage (Lead-Acid Mode)	46.0Vdc @ load < 20% 44.8Vdc @ 20% ≤ load < 50% 42.4Vdc @ load ≥ 50%
Low DC Cut-off Voltage (Lead-Acid Mode)	42.0Vdc @ load < 20% 40.8Vdc @ 20% ≤ load < 50% 38.4Vdc @ load ≥ 50%
Low DC Cut-off Voltage (Li Mode)	42.0Vdc
Low DC Warning SOC (Li Mode)	Low DC Cut-off SOC +5%
Low DC Warning Return SOC (Li Mode)	Low DC Cut-off SOC +10%
Low DC Cut-off SOC(Li Mode)	Default 20%, 5%~50% settable
High DC Recovery Voltage	56.4Vdc(C.V. charging voltage)
High DC Cut-off Voltage	60Vdc
No Load Power Consumption	<50W @Rate Voltage

Table 4 Charge Mode Specifications

INVERTER MODEL		6KW
Utility/Generator Charging Mode		
Charging Algorithm		3-Step
Max. AC Charging Current		80Amp(@VI/P=230Vac)
Bulk Charging Voltage	**Flooded Battery**	58.4Vdc
	AGM / Gel Battery	56.4Vdc
Floating Charging Voltage		54Vdc
Charging Curve		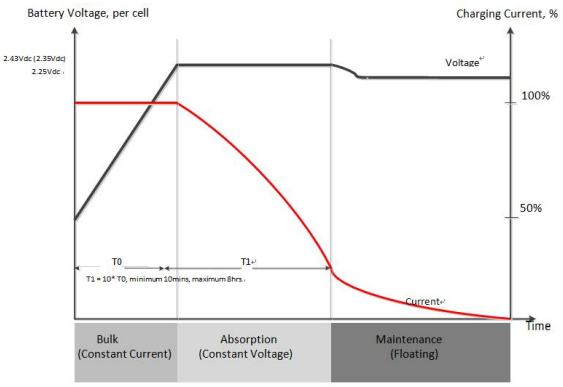
MPPT Solar Charging Mode		
Max. PV Array Power		4500W+4500W
Max. PV Input Current		18.5A+18.5A
PV Isc		25A+25A
Start-up Voltage		100Vdc±10Vdc
PV Array MPPT Voltage Range		65Vdc~450Vdc
Max. PV Array Open Circuit Voltage		500Vdc
Max. Inverter Back Feed Current To The Array		0A
Max. PV Charging Current		100A
Max. Charging Current (AC Charger Plus Solar Charger)		100A

Table 5 General Specifications

INVERTER MODEL	6KW
Safety Certification	CE
Operating Temperature Range	-10℃~ 50℃
Storage temperature	-15℃~ 60℃
Humidity	5% to 95% Relative Humidity (Non-condensing)
Altitude	<2000m
Audible Noise	<50dB
Cooling	Smart Fan Cooling
Housing Dimension (L*W*H), mm	395*320*130
Packing Dimension (L*W*H), mm	540*450*230
Housing Color	White/Black
Net Weight, kg	10.2

11. Trouble Shooting

Problem	LCD/LED/Buzzer	Explanation	What to do
Unit shuts down Automatically during startup process.	LCD/LEDs and buzzer will be active for 3 seconds and then complete off.	The battery voltage is too low .(<1.91V/Cell)	1. Re-charge battery 2. Replace battery
No response after power on.	No indication.	1. The battery voltage is far too low. (<1.4V/Cell) 2. Battery polarity is connected reversed	1. Check if batteries and the wiring are connected well 2. Re-charge battery 3. Replace battery
Mains exist but the unit works in attery mode.	Input voltage is 0 on the LCD and green LED is flashing.	Input protector is tripped	Check if AC breaker is tripped and AC wiring is connected well
	Green LED is flashing.	Insufficient quality of AC power(Shore or Generator)	1.Check if AC wires are too thin and/or too long. 2.Check if generator (if applied) is working well or if input voltage range setting is correct (UPS→Appliance)
	Green LED is flashing.	Set “Battery First” or “Solar First” as the priority of output source	Change output source priority to Utility first
When it’s turned on, internal relay is switching on and off repeatedly.	LCD display and LEDs are flashing	Battery is disconnected	Check if battery wires are connected well
Buzzer beeps continuously and red LED is on. (Fault code) Buzzer beeps once every second, and red LED is flashing. (Warning code)	Fault code 01	Battery is over-charged	Restart the unit, if the error happens again, please return to repair center
		The battery voltage is too high	Check if spec and quantity of batteries are meet requirements
	Fault code 03	Battery input over current	Restart the unit, if the error happens again, please return to repair center
	Fault code 11	Internal temperature of component is over 100℃	1. Check whether the air flow of the unit is blocked or whether the ambient temperature is too high 2. Check whether the thermistor plug is loose
	Fault code 12	Internal communication error	Restart the unit, if the error happens again, please return to repair center
	Fault code 20	Bus voltage is too high	1. If you connect to a lithium battery without communication, check whether the voltage points of the program 19 and 21 are too high for the lithium battery 2. Restart the unit, if the error happens again, please return to repair center
	Fault code 21/ 51	Internal components failed	Restart the unit, if the error happens again, please return to repair center.

	Fault code 23	Bus voltage is too low	Restart the unit, if the error happens again, please return to repair center.
	Fault code 31	Output voltage is too high	
	Fault code 34	Output voltage is too low	
	Fault code 50	Over current or surge	
	Fault code 30	Output short circuited	Check if wiring is connected well and remove abnormal load.
	Fault code 32	The inverter is overload 110% and time is up	Reduce the connected load by switching off some equipment.
	Fault code 52	Negative power fault	1. Check whether the AC output connected to the grid input. 2. Check whether Program 8 settings are the same for all parallel inverters. 3. Check whether the current sharing cables are onnected well in the same parallel phases. 4. Check whether all neutral wires of all parallel units are connected together. 5. If problem still exists, contact repair center.
	Fault code 67	CAN fault	1. If you connect to a lithium battery without communication, check whether the voltage points of the program 19 and 21 are too high for the lithium battery. 2. If the battery is connected well, restart the unit. If the error happens again, please return to repair center.
	Warning code 68	Host loss	
	Warning code 13	Dustproof time out	1. Clean the anti-dust kit. 2. Then the program b46 set to off.
	Warning code 60	The input status is different in parallel system.	Check if AC input wires of all inverters are connected well.
	Warning code 61	Input phase is not correct.	Change the input phase S and T wiring.
	Warning code 62	The output phase not correct in parallel.	1. 1.Make sure the parallel setting are the same system(single or parallel; 3P1,3P2,3P3). 2. Make sure all phases inverters are power on.

Note: To restart the inverter, all power sources need to be disconnected. After the LCD screen light is off, only use the battery to boot.